INTELLECTUAL PROPERTY OFFICE OF SINGAPORE

31 January 2024

PT001/2024B



PATENTS JOURNAL

Copyright © 2024 Intellectual Property Office of Singapore.
All rights reserved. Reproduction or modification of any portion of this Journal without the permission of IPOS is prohibited.

CONTENTS

GENERAL INFORMATION 2

APPLICATIONS PUBLISHED UNDER SECTION 27 5

GENERAL INFORMATION

A: THE PATENTS JOURNAL (SINGAPORE)

1. This Journal dated 31 January 2024**,** is published by the Registry of Patents in accordance with the direction of the Registrar under rule 114 of the Patent Rules (Cap. 221, R 1).

2. Copies of it may be purchased at the following address:

INTELLECTUAL PROPERTY OFFICE OF SINGAPORE

1 Paya Lebar Link #11-03

PLQ 1, Paya Lebar Quarter

Singapore 408533

3. The Registry of Patents does not guarantee the accuracy of its publications, data records or advice nor accept any responsibility for errors or omissions or their consequences. Permission to reproduce extracts from this Journal must be obtained from the Registrar of Patents.

B: THE UPDATES

1. **Updates on General Information**

The Registry wishes to inform that, starting with the patents journal issue 202106A and 202106B, the section on "Information On Wipo And Pct Matters" have been removed and made available via the following website link: https://www.ipos.gov.sg/protect-ip/apply-for-a-patent/forms-fees

Starting with the patents journal issue 201708A and 201708B, the sections on "Information On IP2SG Matters" and "Information On Patent Proceedings Before The Registry" have been removed and made available via the following website link: https://www.ipos.gov.sg/resources/patent

The public may access the relevant information under "Infopacks", "Circulars", "Practice Directions" and "Patents Formalities Manual" on the above IPOS website.

2. **REMOVAL OF CIRCULARS FROM THE PATENTS JOURNAL**

Starting 1 September 2016, the Registry has ceased our practice of publishing circulars in the patents journal. The Registry's circulars will continue to be available via email service and on our website at https://www.ipos.gov.sg/protect-ip/apply-for-a-patent > Circulars & Practice Directions

If you wish to receive our circulars via email, you may subscribe to our mailing list by emailing news@ipos.gov.sg to let us know so that we can keep you informed in future.

C: ENQUIRIES

1. For enquiries relating to official notices and other information appearing in the Journal, kindly contact the Office at the following telephone number: 6339-8616

2. The URL of the Intellectual Property Office of Singapore is https://www.ipos.gov.sg

'INID' NUMBERS IN USE ON SINGAPORE PATENT DOCUMENTS

'INID' is an acronym for 'Internationally agreed Numbers for the Identification of Data'

(10) Document identification

(11) Number of the document

(12) Plain language designation of the kind of document

(19) WIPO country code, or other identification, of the country publishing the document.

(20) Document filing data

(21) Number(s) assigned to the application(s)

(22) Date(s) of filing application(s)

(23) Other date(s) of filing, including exhibition filing date and date of filing complete specification following provisional specification.

(24) Date from which industrial property rights may have effect.

(30) Priority data

(31) Number(s) assigned to priority application(s).

(32) Date(s) of filing priority application(s).

(33) Country (countries) in which the priority application(s) was (were) filed.

(40) Date(s) of making available to the public

(43) Date of publication by printing or similar process of unexamined document, on which no grant has taken place on or before the said date.

(44) Date of publication by printing or similar process of an examined document, on which no grant has taken place on or before the said date.

(45) Date of publication by printing or similar process of a document, on which grant has taken place on or before the said date.

(47) Date of making a granted patent available to the public by viewing, or copying on request

(50) Technical information

(51) International Patent Classification

(52) Domestic or national classification

(54) Title of invention

(56) List of prior art documents, if separate from descriptive text.

(57) Abstract or claim.

(60) Reference(s) to other legally related domestic document(s)

(60) Related by cognate(s).

(61) Related by addition(s).

(62) Related by division(s).

(70) Identification of parties concerned with the document

(70) Name(s) of nominated person

(71) Name(s) of applicant(s).

(72) Name(s) of inventor(s) if known to be such.

(74) Name(s) of attorney(s) or agent(s).

(75) Name(s) of inventor(s) who is (are) also applicant(s)

(80) Identification of data related to International Conventions other than the Paris Convention

(86) PCT Application Number.

(87) PCT Publication Number.

NOTE

(1) The classification used is the International Patent Classification and is identified by the INID code (51). Further editions of the classification are identified as $(51)^2$, $(51)^3$, $(51)^4$ and $(51)^5$.

(2) INID code 74 provides for the name of patent attorney, or firm of attorneys, prosecuting an application.

APPLICATIONS PUBLISHED UNDER SECTION 27

(12) SG PATENT APPLICATION

(13) A

(43) Publication Date: 31/01/2024

(21) Application No: 10202250065Q

(71) Applicant(s): ETAVOLT PTE. LTD.

(22) Date of filing: 06/06/2022

(72) Inventor(s): Cheryldine Lim Qiu Xuan; Ling Zhi Peng; So Yong Heng; Stanley Wang Chang-Kai

(30) Priority Data:

(74) Agent(s): W.P. LAI & COMPANY

(51) International Patent Classification:

(54) Title of Invention: Turnkey fully integrated indoor solutions for solar panel recycling

(57) Abstract:

Silicon based photovoltaic (PV) systems capacity has increased exponentially over the years. Correspondingly, the PV-related waste is also expected to increase, and effective PV end-of-life management solutions are required. In this invention disclosure, an indoor based integrated PV panel recycling solution and its various embodiments is described. The key benefits of this PV recycling setup and its various embodiments include: (1) clean removal of panel backsheet and EVA encapsulant while leaving the glass piece intact, (2) tackling the panel recycling problem from a high volume, high throughput perspective, (3) selective extraction for Ag without contamination of Al, (4) rapid Ag extraction process for high throughput recycling, (5) simple to operate design using integrated solutions with effortless and user-friendly functions and (6) scalable and suitable for industrial use. By adopting the approach in this invention disclosure, solar panels can now be efficiently and effectively recycled in an environmentally friendly approach.

No Figure.

APPLICATIONS PUBLISHED UNDER SECTION 27 - cont'd

(12) SG PATENT APPLICATION

(13) A

(43) Publication Date: 31/01/2024

(21) Application No: 10202250066F

(71) Applicant(s): ETAVOLT PTE. LTD.

(22) Date of filing: 06/06/2022

(72) Inventor(s): Cheryldine Lim Qiu Xuan; Ling Zhi Peng; So Yong Heng; Stanley Wang Chang-Kai

(30) Priority Data:

(74) Agent(s): W.P. LAI & COMPANY

(51) International Patent Classification:

(54) Title of Invention: DECENTRALISED, MODULAR SOLAR MODULE RECYCLING SOLUTION

(57) Abstract:

An assembly for recycling of PV waste within a container is disclosed. Within the container, there is provided the assembly for recycling solar panel, comprising (a) a deframer (20) for removing aluminium frames from each solar panel and junction boxes and copper wiring; (b) a portable I-V tester (30; (c) a shearing tool (41), air compressor and roller table (40) which is responsible for cutting up the deframed panels into smaller slices; (d) a first conveyor (50) and a second conveyor (70) used in transporting the sheared panel pieces from the shearing tool (41); (e) a crusher (60); (f) a sifter (80); and (g) a collection bag (90) to be used to collect recycled material from the sifter (80).

(FIG. 4b)

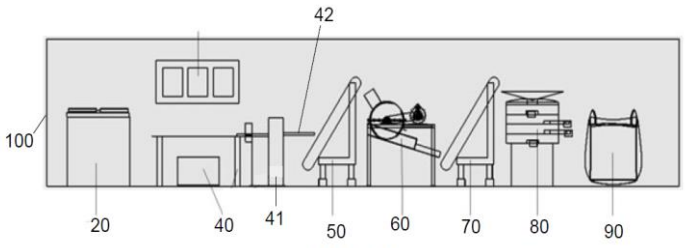

FIG. 4B

APPLICATIONS PUBLISHED UNDER SECTION 27 - cont'd

(12) SG PATENT APPLICATION

(13) A

(43) Publication Date: 31/01/2024

(21) Application No: 10202250079D

(71) Applicant(s): Applied Science Venture (SGP) Pte Ltd

(22) Date of filing: 07/06/2022

(72) Inventor(s): HO Kian Cheong

(30) Priority Data:

(74) Agent(s): MARKS & CLERK SINGAPORE LLP

(51) International Patent Classification:

(54) Title of Invention: VENTILATED WINDOW STRUCTURE

(57) Abstract:

A ventilated window structure 100 is described herein. In a specific embodiment, the ventilated window structure 100 includes a first panel 101 having a ventilation opening 107, and a second panel 103 spaced from the first panel 101 and which occludes the ventilation opening 107 to define an inner airflow passage in fluid communication with the ventilation opening 107. A method of assembling and fabricating a ventilated window structure 100 is also described.

[Fig. 3a]

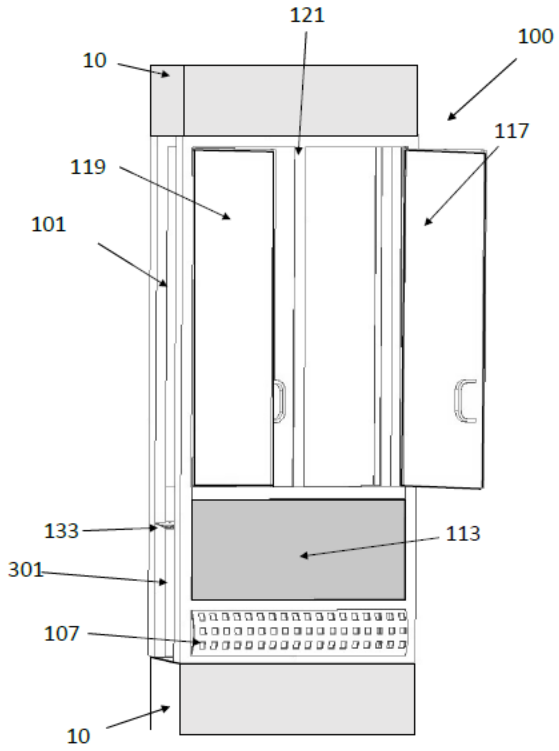

Fig. 3a

APPLICATIONS PUBLISHED UNDER SECTION 27 - cont'd

(12) SG PATENT APPLICATION

(13) A

(43) Publication Date: 31/01/2024

(21) Application No: 10202250100B

(71) Applicant(s): BATO KOSUKE

(22) Date of filing: 08/06/2022

(72) Inventor(s): BATO KOSUKE

(30) Priority Data:

(74) Agent(s): ALLIED INTUIT PTE. LTD.

(51) International Patent Classification:

(54) Title of Invention: A HYDRO-ENERGY CAPTURE SYSTEM

(57) Abstract:

Disclosed herein is a hydro-energy capture system comprising a first dynamic vessel, a first actuator for displacing the first dynamic vessel, a second dynamic vessel and a second actuator for displacing the second dynamic vessel. The hydro-energy capture system further comprises an actuator coupling for fluid communicating the first actuator to the second actuator and a fan assembly for capturing flow of fluid therealong and transducing the fluid flow into at least one of electrical energy, mechanical energy and hydraulic energy. Wherein introducing liquid into the first dynamic vessel displaces the first dynamic vessel towards the lowered position and aid in the displacement of the second dynamic vessel towards the raised position. A first static vessel and a second static vessel coupled respectively to the first dynamic vessel and the second dynamic vessel aid in displacement thereof via Bernoulli equilibrium through the transport of liquid via siphon action.

Figure 1

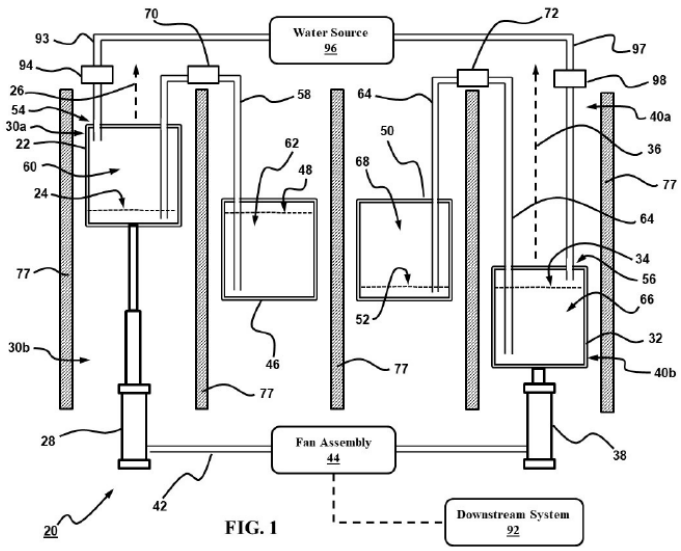

FIG. 1

APPLICATIONS PUBLISHED UNDER SECTION 27 - cont'd

(12) SG PATENT APPLICATION

(13) A

(43) Publication Date: 31/01/2024

(21) Application No: 10202250106F

(71) Applicant(s): Iron Gaming Limited

(22) Date of filing: 09/06/2022

(72) Inventor(s): Peter Marek Zmijewski; Scott Matthew Dowdell

(30) Priority Data:

(74) Agent(s): RODYK & DAVIDSON LLP

(51) International Patent Classification:

(54) Title of Invention: Method And Apparatus For Validating Software Use On An Apparatus

(57) Abstract:

A method and an apparatus for validating software usage, the method comprising: collecting data containing user activity data when a piece of software is running and being used by a user; periodically generating a data packet containing the data collected to obtain a plurality of the data packets; verifying that each data packet is generated according to predetermined rules; checking the collected data contained in a plurality of verified data packets to determine whether the user is using the software; and checking whether the checked collected data have similarity with past collected data that exceeds a predetermined level of similarity, wherein software usage by a user is deemed to be validated if it is determined that the user is using the software and no past collected data exceeding the predetermined level of similarity is found.

FIG. 8

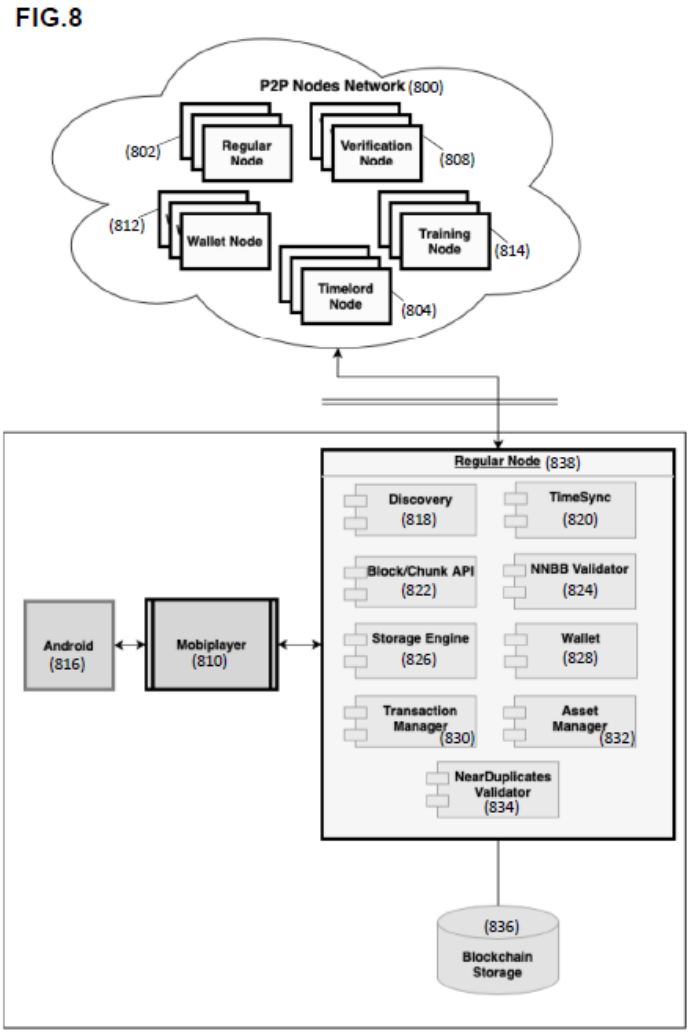

APPLICATIONS PUBLISHED UNDER SECTION 27 - cont'd

(12) SG PATENT APPLICATION

(13) A

(43) Publication Date: 31/01/2024

(21) Application No: 10202250118P

(71) Applicant(s): SECRETLAB SG PTE. LTD.

(22) Date of filing: 09/06/2022

(72) Inventor(s): Vincent Sin; Lim Ee Hao Gabriel

(30) Priority Data:

(74) Agent(s): VIERING, JENTSCHURA & PARTNER LLP

(51) International Patent Classification:

(54) Title of Invention: AN APPARATUS FOR A DISPLAY DEVICE

(57) Abstract:

Disclosed is an apparatus for a display device including a fastening assembly mountable to a surface; an adjustment portion having an end configured to receive a display device mount, and an opposing end configured for attachment to the fastening assembly; the adjustment portion comprising at least one hollow portion formed of or from a metallic material for receiving an accessory, and a sheath formed of or from a magnetic material for magnetic coupling with the at least one hollow portion, wherein the sheath is moveable along a longitudinal axis of the adjustment portion. The disclosure further includes a kit of parts of an apparatus for a display device, and a method of manufacturing an apparatus for a display device.

FIG. 1

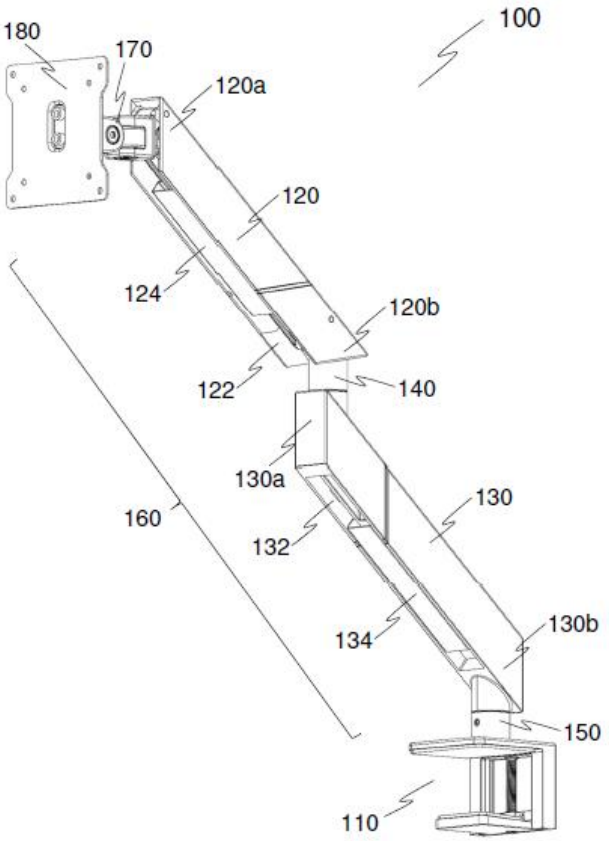

FIG. 1

APPLICATIONS PUBLISHED UNDER SECTION 27 - cont'd

(12) SG PATENT APPLICATION

(13) A

(43) Publication Date: 31/01/2024

(21) Application No: 10202250119N

(71) Applicant(s): Nebulum Technologies Co., Ltd.

(22) Date of filing: 09/06/2022

(72) Inventor(s): Yuan-Hsiao HUANG

(30) Priority Data:

(74) Agent(s): CANTAB IP PTE. LTD.

(51) International Patent Classification:

(54) Title of Invention: Methods for Preparing and Analyzing Biopsies and Biological Samples

(57) Abstract:

Matrix-assisted methods and compositions for solidifying and preparing liquid biopsies and other liquid samples for three-dimensional high-resolution imaging and diagnostics by microscopy.

Figure 1

FIGURE 1

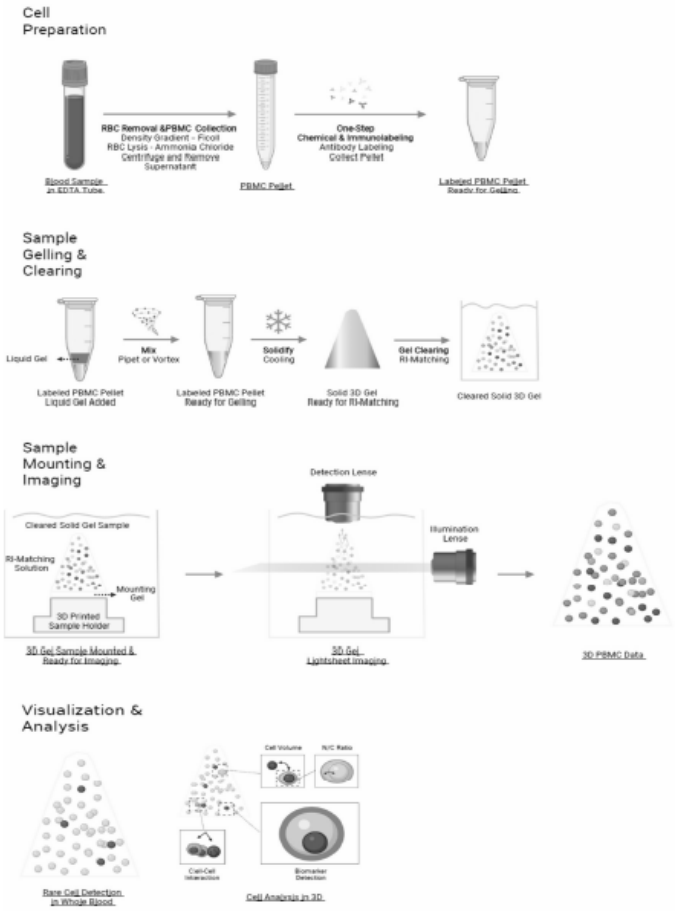

APPLICATIONS PUBLISHED UNDER SECTION 27 - cont'd

(12) SG PATENT APPLICATION

(13) A

(43) Publication Date: 31/01/2024

(21) Application No: 10202250123G

(71) Applicant(s): AEROGEL R&D PTE. LTD.

(22) Date of filing: 10/06/2022

(72) Inventor(s):
PARK JONG CHUL;
SHEIK MOHAMED ANEES S/O SHIEK ABDUL FAROOK;
NG BAO YI;
NEO HUI YI

(30) Priority Data:

(74) Agent(s):
RODYK & DAVIDSON LLP

(51) International Patent Classification:

(54) Title of Invention: Intumescent Sheet used in an Electric Vehicle Battery for Thermal Runaway Management

(57) Abstract:

An intumescent sheet to be used in an Electric Vehicle Battery for thermal runaway management, wherein out of 100 weight percentage (wt%) of the intumescent sheet, the intumescent sheet comprises: 5 to 20 wt% of non-woven fiber mat; 60 to 95 wt% of an alkali-silicate based binder; and 0.5 to 10 wt% of microporous and/or mesoporous and/or nanoporous additive, wherein the non-woven fiber mat is infused with the alkali-silicate based binder by impregnation of the non-woven fiber mat with an alkali-silicate based solution.

(No suitable figure)

APPLICATIONS PUBLISHED UNDER SECTION 27 - cont'd

(12) SG PATENT APPLICATION

(13) A

(43) Publication Date: 31/01/2024

(21) Application No: 10202250139X

(71) Applicant(s): GP Network Asia Pte. Ltd.

(22) Date of filing: 13/06/2022

(72) Inventor(s): Arnav JAIN

(30) Priority Data:

(74) Agent(s): VIERING, JENTSCHURA & PARTNER LLP

(51) International Patent Classification:
G06Q 30/018
G06V 20/70
G06Q 20/32

(54) Title of Invention: METHOD AND DEVICE FOR DETECTING MERCHANT FROM PAYMENT TRANSACTION

(57) Abstract:

Aspects concern a method for detecting a merchant from a payment transaction between a payor and a payee, the method including receiving, by a payment server of a payment service, from a payor device of the payor, one or more tags of one or more objects in a payment transaction environment in one or more images that is captured as part of the payment transaction, obtaining, by the payment server, payee transaction data of one or more payment transactions of the payee, and receiving, by the payment server, a payee location of the one or more payment transactions of the payee. The method further includes determining, by the payment server, whether the payee is the merchant, based on the received one or more tags, the obtained payee transaction data and the received payee location.

[Fig. 3]

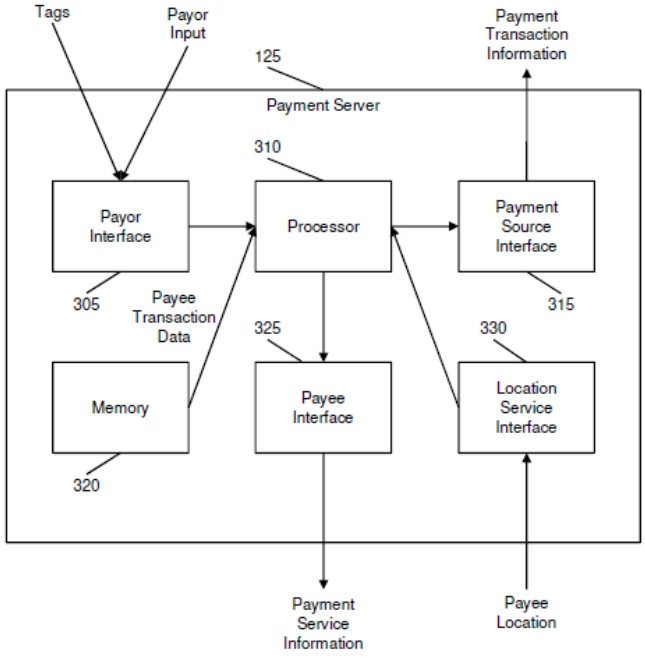

[Fig. 3]

APPLICATIONS PUBLISHED UNDER SECTION 27 - cont'd

(12) SG PATENT APPLICATION

(13) A

(43) Publication Date: 31/01/2024

(21) Application No: 10202250164R

(71) Applicant(s): SENSETIME INTERNATIONAL PTE. LTD.; NANYANG TECHNOLOGICAL UNIVERSITY

(22) Date of filing: 15/06/2022

(72) Inventor(s): ZHANG, Junzhe; REN, Daxuan; CAI, Zhongang; YEO, Chai Kiat; DAI, Bo; LOY, Chen Change

(30) Priority Data:

(74) Agent(s): ONE LEGAL LLC

(51) International Patent Classification:

(54) Title of Invention: METHOD AND APPARATUS FOR GENERATING VIRTUAL OBJECT, DEVICE, STORAGE MEDIUM, AND PROGRAM PRODUCT

(57) Abstract:

Provided are a method and apparatus for generating a virtual object, a device, a storage medium, and a program product. The method includes: acquiring a first image including a first object; generating, based on a first potential feature of a generative adversarial network, a first three-dimensional virtual object by using the generative adversarial network; rendering the first three-dimensional virtual object as a second image according to a first camera pose of the first image; determining a first loss value based on the first image and the second image; and updating, based on the first loss value, the first potential feature and the first camera pose to obtain a second potential feature and a second three-dimensional virtual object corresponding to the second potential feature, where the second three-dimensional virtual object is generated based on the second potential feature by using the generative adversarial network.

[Figure 1A]

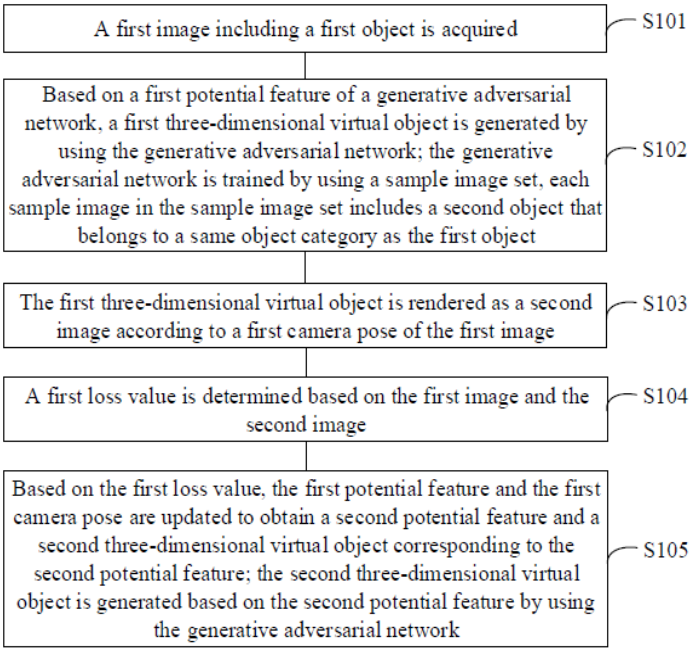

FIG. 1A

APPLICATIONS PUBLISHED UNDER SECTION 27 - cont'd

(12) SG PATENT APPLICATION

(13) A

(43) Publication Date: 31/01/2024

(21) Application No: 10202250175C

(71) Applicant(s): ImmunoScape Pte. Ltd.

(22) Date of filing: 15/06/2022

(72) Inventor(s): Dan MacLeod; Katja Fink; Michael Fehlings; Eng Loan Ping; Kan Xing Wu; Alessandra Nardin

(30) Priority Data:

(74) Agent(s): MORGAN LEWIS STAMFORD LLC

(51) International Patent Classification:

(54) Title of Invention: HUMAN T CELL RECEPTORS AND USES THEREOF

(57) Abstract:

The present application describes novel T cell receptors specifically binding tumor antigen derived peptides, engineered T cells expressing these receptors, nucleic acids encoding these T cell receptors and methods of using T cells expressing these engineered T cells in adoptive cell transfer to treat diseases in a subject.

[Figure 1]

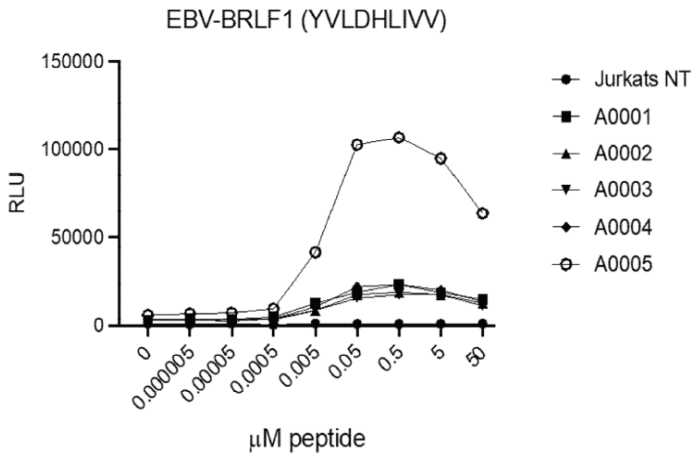

FIGURE 1

APPLICATIONS PUBLISHED UNDER SECTION 27 - cont'd

(12) SG PATENT APPLICATION

(13) A

(43) Publication Date: 31/01/2024

(21) Application No: 10202250179Q

(71) Applicant(s): KAHA PTE. LTD.

(22) Date of filing: 16/06/2022

(72) Inventor(s): SANTOSH PRABHU

(30) Priority Data:

(74) Agent(s): KAHA PTE. LTD.

(51) International Patent Classification:

(54) Title of Invention: METHOD FOR ORGANIZING ONE OR MORE LAYERS IN A WEARABLE

(57) Abstract:

In one aspect of the present invention, a method of slicing information into static and dynamic data, the method comprising, receiving event information at the mobile device wherein, the event information is provided by the application server, based on the selection provided by the user. Segregating subject event information into static and dynamic data at the mobile device wherein, the segregation of data is based on dynamicity of data and rate of change in data and frequency. Identifying at least one of static and dynamic data from the event information at the mobile device wherein subject static and dynamic data are shared with a smart wearable device. Creating at least one or more of static and dynamic data layers to display at least one or more data, by means of layer, to a user at the smart wearable device wherein, the number of dynamic data layer depends on the number of dynamic data identified. Identifying and comparing each new event activity data received from the application server, at the mobile device, for existing data, and subject dynamic and static layer data is updated with a new data when new data value is identified. Creating, a stack of dynamic layers of data over identified static layer data, at the smart wearable device based on the data received from the mobile device.

[FIG. 4]

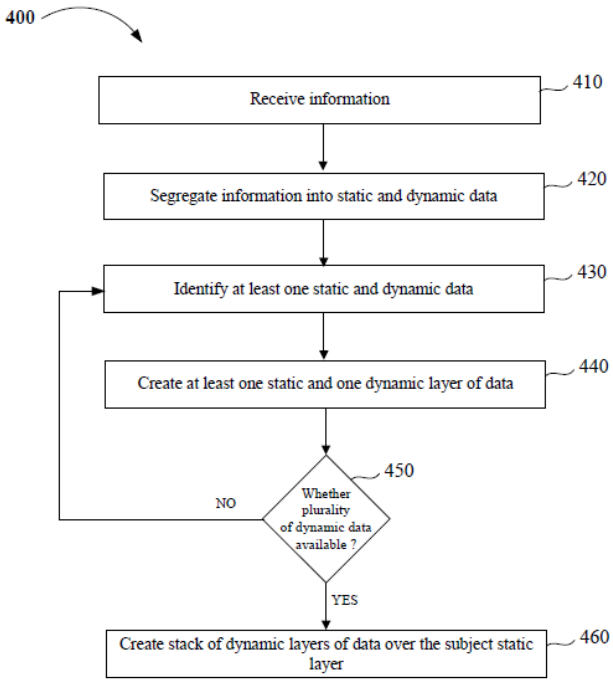

FIG. 4

APPLICATIONS PUBLISHED UNDER SECTION 27 - cont'd

(12) SG PATENT APPLICATION

(13) A

(43) Publication Date: 31/01/2024

(21) Application No: 10202250180K

(71) Applicant(s): KAHA PTE. LTD.

(22) Date of filing: 16/06/2022

(72) Inventor(s): SANTOSH PRABHU

(30) Priority Data:

(74) Agent(s): KAHA PTE. LTD.

(51) International Patent Classification:

(54) Title of Invention: METHOD, DEVICE AND SYSTEM FOR PERSONALIZED AVATAR BASED ON USER DATA

(57) Abstract:

In one aspect of the present invention, a method of generating and customizing one or more avatars, the method comprising steps of, receiving, by a smart wearable device, a request from a user, for at least one of generation and customization of avatar, transmitting, by the smart wearable device to an application, the user request along with plurality of data from one or more sensors through a mobile device, receiving, by the application server, the user request, categorizing and clustering, by the application server, sensor data into at least one of activity, health, physiological, mood and image data, identifying and extracting, by the application server, the features individually or combined from subject data, wherein, the identification of features is based on subject user request and extraction of features is based on the availability and category of user data, generating, by the application server, at least one or more avatars for the subject user's request, wherein, the generation of avatar is based on at least one category of data and displaying, at the smart wearable device, at least one or more avatars in response to the user's request.

[FIG. 3]

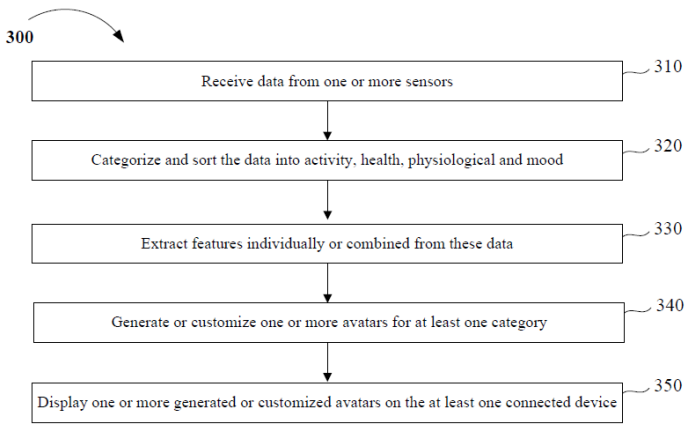

FIG. 3

APPLICATIONS PUBLISHED UNDER SECTION 27 - cont'd

(12) SG PATENT APPLICATION

(13) A

(43) Publication Date: 31/01/2024

(21) Application No: 10202250181K

(71) Applicant(s): KAHA PTE. LTD.

(22) Date of filing: 16/06/2022

(72) Inventor(s): SUDHEENDRA SHANTHARAM

(30) Priority Data:

(74) Agent(s): KAHA PTE. LTD.

(51) International Patent Classification:

(54) Title of Invention: METHOD AND SYSTEM FOR DETERMINING REAL TIME STATUS OF AN EVENT

(57) Abstract:

In one aspect of the present invention, a method of receiving activity data from an external server to the application server, the method comprising, monitoring at least one event from the plurality of ongoing events at the application server, identifying at least one crucial activity from the plurality of crucial activities at the application server, initiating at least one trigger from the plurality of triggers at the application server, when the first crucial activity is achieved, wherein, subject first trigger initiates an API call to pull the activity data relating the subject event from the external server, at a first frequency rate and receiving the activity data of subject event at the first frequency rate, at the application server from the external server, wherein the first frequency rate is every 15 seconds. In an embodiment, the activity data of the event is received by the application server through a pull mechanism, initiated in response to the API call.

[FIG. 1]

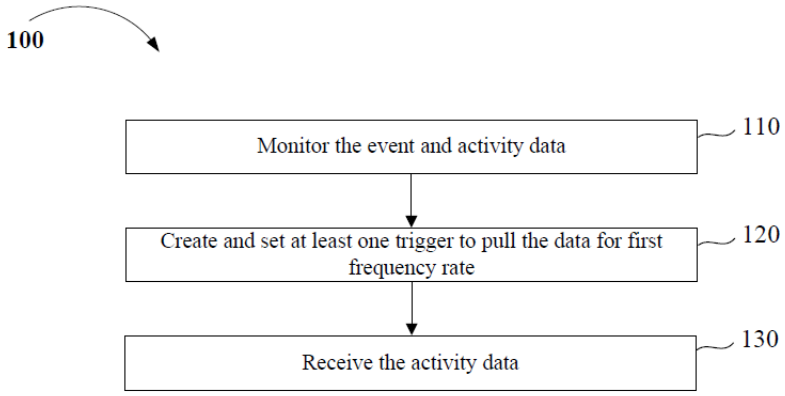

FIG. 1

APPLICATIONS PUBLISHED UNDER SECTION 27 - cont'd

(12) SG PATENT APPLICATION

(13) A

(43) Publication Date: 31/01/2024

(21) Application No: 10202250182J

(71) Applicant(s): KAHA PTE. LTD.

(22) Date of filing: 16/06/2022

(72) Inventor(s): SANTOSH PRABHU

(30) Priority Data:

(74) Agent(s): KAHA PTE. LTD.

(51) International Patent Classification:

(54) Title of Invention: SMART SLEEP MANAGEMENT SYSTEM

(57) Abstract:

In one aspect of the present invention, a method of managing and monitoring sleep of a user, the method comprising, monitoring, by a smart wearable device, at least one activity of the user. The user activity is at least one of, step movement, sleep, heart rate, body temperature. Identifying, by the smart wearable device, at least one status of user, wherein, the status is at least one of sleep and active and activating, by the smart wearable device, a first rule, wherein the first rule comprises one or more instructions to suppress the screen display of the subject smart wearable device, when the user is at sleep status and wrist of the user is lifted. In an embodiment, the one activity is identified by means of user's heart rate value and accelerometer data of the smart wearable device. In another embodiment, the sleep status and position of wrist of the user is identified by means of accelerometer position sensors and gyroscope data of the smart wearable device.

[FIG. 3]

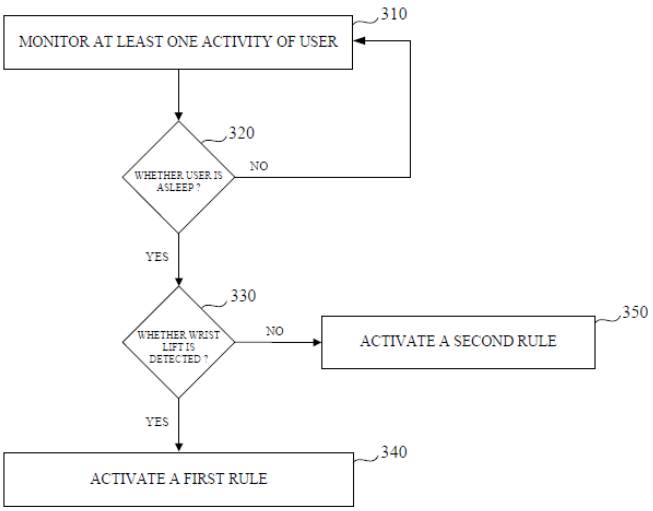

FIG. 3

APPLICATIONS PUBLISHED UNDER SECTION 27 - cont'd

(12) SG PATENT APPLICATION

(13) A

(43) Publication Date: 31/01/2024

(21) Application No: 10202250183H

(71) Applicant(s): KAHA PTE. LTD.

(22) Date of filing: 16/06/2022

(72) Inventor(s): SUDHEENDRA SHANTHARAM

(30) Priority Data:

(74) Agent(s): KAHA PTE. LTD.

(51) International Patent Classification:

(54) Title of Invention: METHOD FOR CONNECTING ONE OR MORE DEVICES WITH A MOBILE DEVICE

(57) Abstract:

In one aspect of the present invention, a system for establishing a communication, comprising, an IoT device, a mobile device and a first network. The IoT device and the mobile device are configured with at least two communication modules, wherein, a first communication module of IoT device stores the name or address of a second communication module. The first network is capable of connecting the IoT device with the mobile device and vice-versa through a first connection established by the first communication modules configured in the IoT device and the mobile device and the mobile device configured with a mobile application, which is capable of executing a third set of instructions to fetch and receive the name of the second communication module of IoT device, through the first connection, initiating and establishing a second connection between the mobile device and the IoT device, wherein, the first and second communication modules are BLE and BT modules respectively and wherein the first and second connections are BLE and BT connection respectively.

[FIG. 3]

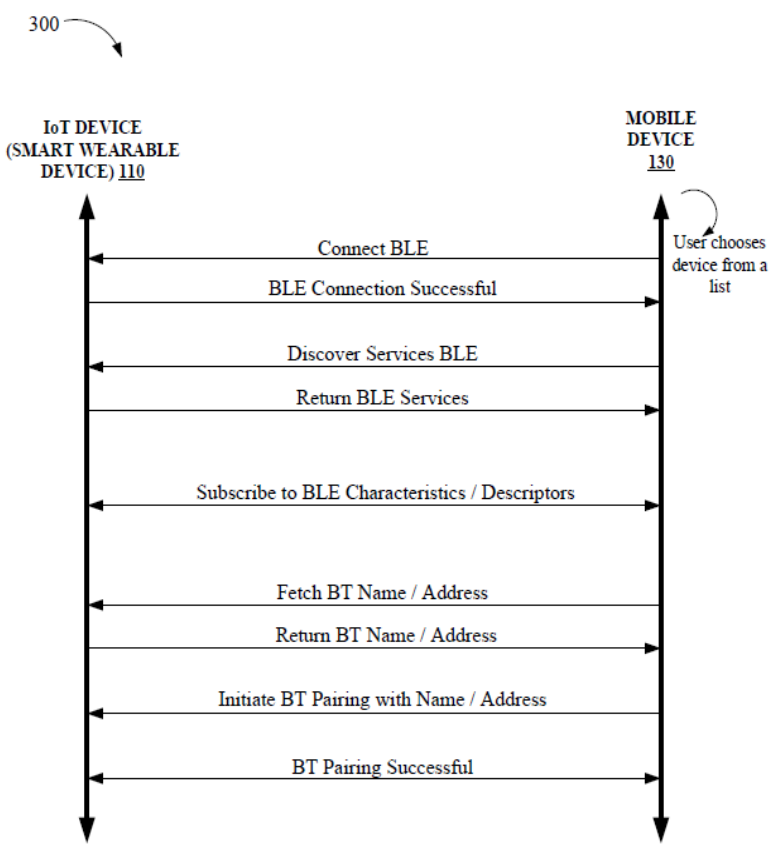

FIG. 3

APPLICATIONS PUBLISHED UNDER SECTION 27 - cont'd

(12) SG PATENT APPLICATION

(13) A

(43) Publication Date: 31/01/2024

(21) Application No: 10202250184V

(71) Applicant(s): KAHA PTE. LTD.

(22) Date of filing: 16/06/2022

(72) Inventor(s): SUDHEENDRA SHANTHARAM

(30) Priority Data:

(74) Agent(s): KAHA PTE. LTD.

(51) International Patent Classification:

(54) Title of Invention: METHOD AND SYSTEM FOR DETERMINING OCCURRENCE OF AN EVENT

(57) Abstract:

In one aspect of the present invention, a method for triggering a notification to a user in a smart wearable device, the method comprising the steps of, identifying an event by an application server wherein which searches and finds the subject event from a plurality of upcoming events. Receiving the event details of subject identified event by the application server, wherein the application server monitors subject event progress in real time. Receiving, one or more activity data relating to the subject event by the application server, identifying, the user's relevance for the subject event by the application server, receiving real-time activity data of the subject event by a mobile device, identifying user's event preference and status in relation to received event activity data by the mobile device, wherein subject preferred event activity data is shared with a smart wearable device and receiving and triggering the at least one notification for the subject activity data of the event by the smart wearable device.

[FIG. 3]

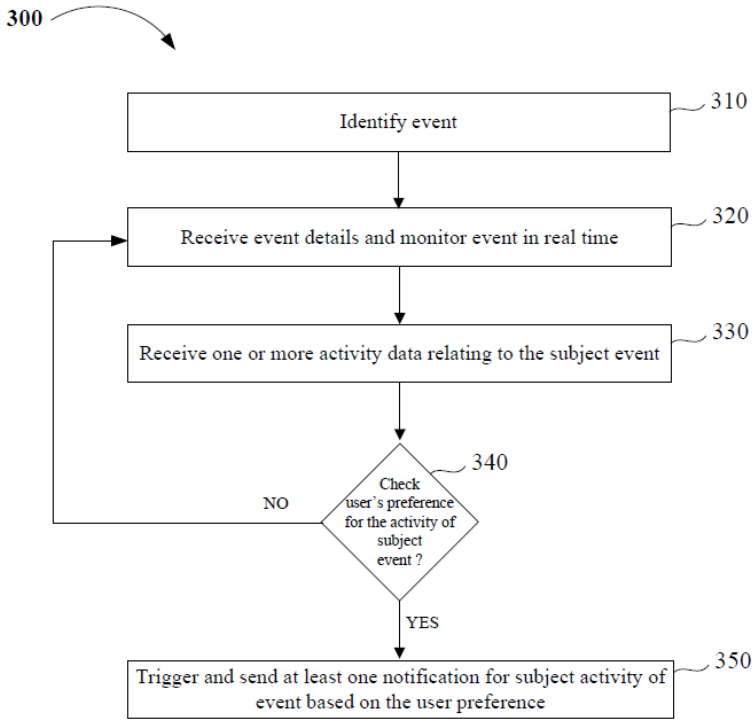

FIGURE 3

APPLICATIONS PUBLISHED UNDER SECTION 27 - cont'd

(12) SG PATENT APPLICATION

(13) A

(43) Publication Date: 31/01/2024

(21) Application No: 10202250205E

(71) Applicant(s): MASTERMARK PTE LTD

(22) Date of filing: 17/06/2022

(72) Inventor(s): Christopher Wee Jin Wei

(30) Priority Data:

(74) Agent(s): YUSARN AUDREY LLC

(51) International Patent Classification:

(54) Title of Invention: NET TRAP FOR CAPTURING FLYING ANIMALS

(57) Abstract:

A net trap (2) for capturing flying animals comprising:

at least two telescopic masts (5); and

at least one net (3) extending between each of the masts;

wherein, when the net trap is in used, each of the masts are positioned adjacent a roost tree of the flying animals and are extendible in a generally upward direction to thereby allow unfurling of the net(s) to a position adjacent the roost tree.

[Figure. 1]

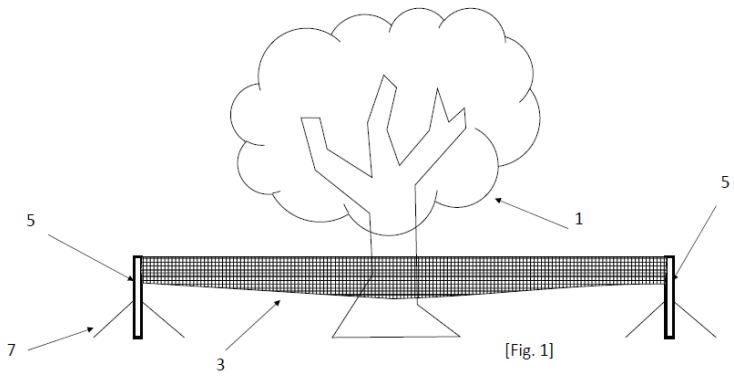

[Fig. 1]

APPLICATIONS PUBLISHED UNDER SECTION 27 - cont'd

(12) SG PATENT APPLICATION

(13) A

(43) Publication Date: 31/01/2024

(21) Application No: 10202250207M

(71) Applicant(s): PT GoTo Gojek Tokopedia Tbk

(22) Date of filing: 17/06/2022

(72) Inventor(s):
NG Germayne;
CHIA Li Juan

(30) Priority Data:

(74) Agent(s): MARKS & CLERK SINGAPORE LLP

(51) International Patent Classification:
G06Q 10/04
G06Q 50/30
H04W 4/02
G06N 3/09
G06N 20/00

(54) Title of Invention: METHODS AND SYSTEMS FOR PREDICTING JOURNEY TIME

(57) Abstract:

Methods and systems for predicting journey time are described. A method of predicting journey time comprises: obtaining a set of initial speed profiles, each initial speed profile of the set of initial speed profiles corresponding to a road portion on an initial map of a geographic area and comprising a set of speed values for the road portion, each speed value corresponding to a time interval; receiving a plurality of global positioning system data sets, each global positioning system data set corresponding to a respective journey made by a respective vehicle in the geographic area and comprising a set of geolocation indications and corresponding time indications; determining speed data from the of geolocation indications and corresponding time indications corresponding to journey segments along respective road portions; updating initial speed profiles of the set of initial speed profiles using the speed data to determine a set of current speed profiles; training a journey model using at least the set of current speed profiles; and determining a predicted journey time for a journey using the journey model.

[FIG.4 to be printed with Abstract]

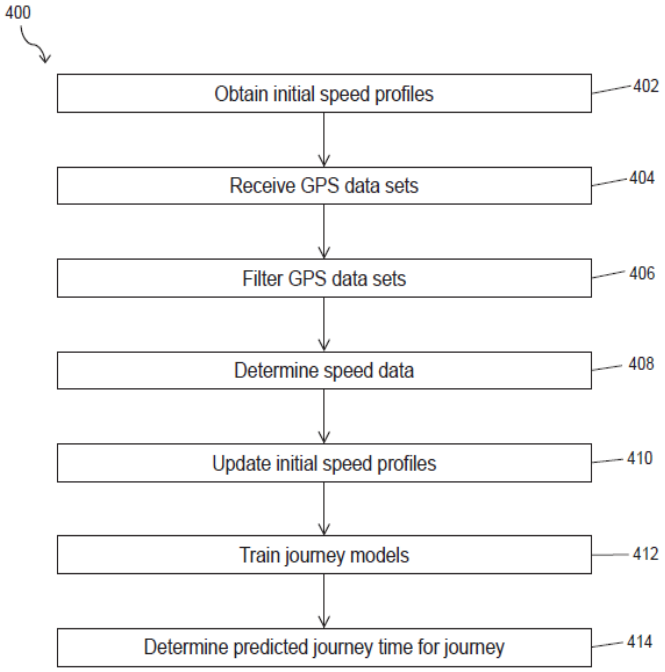

FIG.4

APPLICATIONS PUBLISHED UNDER SECTION 27 - cont'd

(12) SG PATENT APPLICATION

(13) A

(43) Publication Date: 31/01/2024

(21) Application No: 10202250217M

(71) Applicant(s): Panasonic Intellectual Property Corporation of America

(22) Date of filing: 17/06/2022

(72) Inventor(s): CHITRAKAR, Rojan; URABE, Yoshio; MOTOZUKA, Hiroyuki; PUSHKARNA, Rajat

(30) Priority Data:

(74) Agent(s): SPRUSON & FERGUSON (ASIA) PTE. LTD.

(51) International Patent Classification:

(54) Title of Invention: COMMUNICATION APPARATUS AND COMMUNICATION METHOD FOR EXTENDED SENSING BY PROXY

(57) Abstract:

The present disclosure provides a communication apparatus and a communication method for extended sensing by proxy, the communication apparatus comprising: a receiver, which, in operation, receives a first request frame from a second communication apparatus, the first request frame indicating a condition to select one or more links, each of the one or more links attached to one or more third communication apparatuses; circuitry, which, in operation, is configured to select a fourth communication apparatus and generate a second request to a fourth communication apparatus to perform a measurement on the one or more links; and a transmitter, which, in operation, transmits a first report frame to the second communication apparatus carrying one or more reports of the measurement corresponding to the one or more links.

[Figure 13]

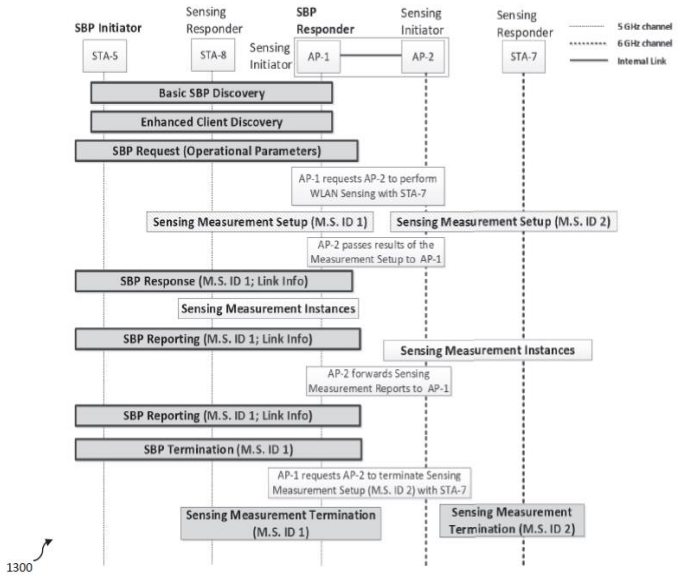

Figure 13

APPLICATIONS PUBLISHED UNDER SECTION 27 - cont'd

(12) SG PATENT APPLICATION

(13) A

(43) Publication Date: 31/01/2024

(21) Application No: 10202250225G

(71) Applicant(s): GRABTAXI HOLDINGS PTE. LTD.

(22) Date of filing: 20/06/2022

(72) Inventor(s): Andrei Georgescu; Adrian-Ioan Margin; Bogdan-Andrei Gliga-Hambet; Zsolt-Francisc Vadaszi

(30) Priority Data:

(74) Agent(s): VIERING, JENTSCHURA & PARTNER LLP

(51) International Patent Classification:
G01C 11/06 (2006.01)
G06T 7/60 (2017.01)
G06F 16/29 (2019.01)
G06N 3/02 (2006.01)

(54) Title of Invention: METHOD AND DEVICE FOR PLACING ROAD OBJECTS ON MAP USING SENSOR INFORMATION

(57) Abstract:

Aspects concern a method including determining initial map positions of a road object on a map, the initial map positions respectively corresponding to images of the road object that are captured by a camera at different camera positions on the map, and constructing a pose graph in which one or more pairs of the initial map positions are respectively connected by first edges, one or more pairs of the different camera positions are respectively connected by second edges, and the initial map positions are respectively connected to the different camera positions by third edges. The method further includes optimizing the constructed pose graph by adjusting the initial map positions, the different camera positions, the second edges and the third edges so that lengths of the first edges are minimized, and determining a final map position of the road object, based on the optimized pose graph.

[Fig. 5]

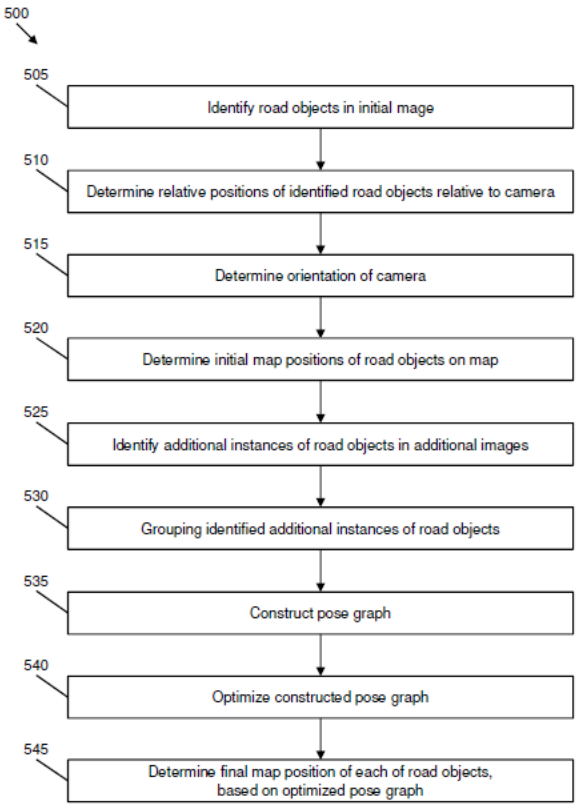

[Fig. 5]

APPLICATIONS PUBLISHED UNDER SECTION 27 - cont'd

(12) SG PATENT APPLICATION

(13) A

(43) Publication Date: 31/01/2024

(21) Application No: 10202250230A

(71) Applicant(s): United Microelectronics Corp.

(22) Date of filing: 20/06/2022

(72) Inventor(s):
ZHANG Sheng;
QI Chunyuan;
CHEN Xingxing;
PANG Chien-Kee

(30) Priority Data:
202110725291.0
29/06/2021
CHINA

(74) Agent(s): Amica Law LLC

(51) International Patent Classification:

(54) Title of Invention: SEMICONDUCTOR STRUCTURE AND MANUFACTURING METHOD THEREOF

(57) Abstract:

Provided are a semiconductor structure and a manufacturing method thereof. The semiconductor structure includes a carrier substrate, a trap-rich layer, a dielectric layer, an interconnect structure, a device structure layer and a circuit structure. The trap-rich layer is disposed on the carrier substrate. The dielectric layer is disposed on the trap-rich layer. The interconnect structure is disposed on the dielectric layer. The device structure layer is disposed on the interconnect structure and electrically connected to the interconnect structure. The circuit structure is disposed on the device structure layer and electrically connected to the device structure layer.

FIG. 1B

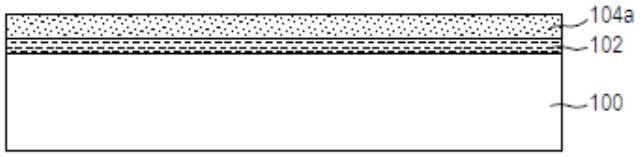

FIG. 1B

APPLICATIONS PUBLISHED UNDER SECTION 27 - cont'd

(12) SG PATENT APPLICATION

(13) A

(43) Publication Date: 31/01/2024

(21) Application No: 10202250234Y

(71) Applicant(s): SENSETIME INTERNATIONAL PTE. LTD.; NANYANG TECHNOLOGICAL UNIVERSITY

(22) Date of filing: 20/06/2022

(72) Inventor(s): WU, Haoning; CHEN, Chaofeng; HOU, Jingwen; LIAO, Liang; WANG, Annan; SUN, Wenxiu; YAN, Qiong; LIN, Weisi

(30) Priority Data:

(74) Agent(s): ONE LEGAL LLC

(51) International Patent Classification:

(54) Title of Invention: MODEL TRAINING AND IMAGE PROCESSING METHODS AND APPARATUSES, ELECTRONIC DEVICE, AND STORAGE MEDIUM

(57) Abstract:

The embodiments disclose model training and image processing methods and apparatuses, an electronic device, and a storage medium. The image processing method includes that: at least one first image frame sequence is determined based on a video to be processed, each first image frame sequence including at least one frame of first image; a second image frame sequence is determined, for each first image frame sequence, based on the first image frame sequence, each frame of second image in the second image frame sequence corresponding to a frame of first image in the first image frame sequence, and at least one first pixel block in each frame of second image being obtained by sampling at least one first image block in a corresponding first image; first quality information of each second image frame sequence is determined; and second quality information of the video to be processed is determined based on each first quality information.

[Figure 1]

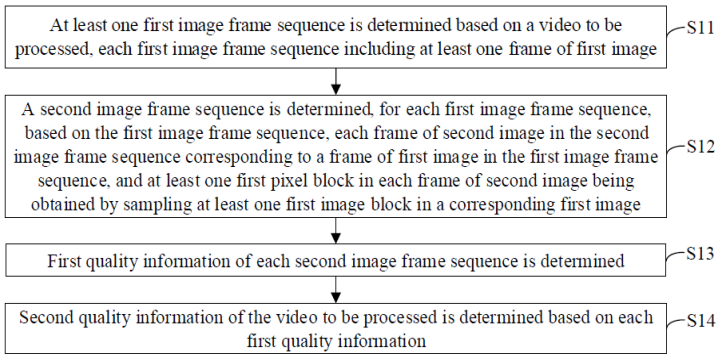

FIG. 1

APPLICATIONS PUBLISHED UNDER SECTION 27 - cont'd

(12) SG PATENT APPLICATION

(13) A

(43) Publication Date: 31/01/2024

(21) Application No: 10202250237G

(71) Applicant(s): Spinor Media Inc.

(22) Date of filing: 21/06/2022

(72) Inventor(s): Zae Young KIM

(30) Priority Data:

(74) Agent(s): ELLA CHEONG LLC

(51) International Patent Classification:

(54) Title of Invention: RESERVATION SUBSTITUTE PAYMENT PROCESSING METHOD USING RESERVATION SUBSTITUTE PAYMENT PROCESSING SERVER AND SYSTEM USING THE SAME

(57) Abstract:

The present disclosure provides a substitute payment processing method using a reservation substitute payment processing server, the substitute payment processing method including receiving a request from at least one of a beneficiary and a substitute payer to issue a reservation substitute payment unit; issuing the reservation substitute payment unit based on identification information of the beneficiary and the substitute payer, receiving a payment request from the beneficiary, processing a substitute payment based on whether a substitute payment condition of the reservation substitute payment unit is satisfied, and reflecting results of processing the substitute payment to the reservation substitute payment unit.

[Fig.1]

FIG.1

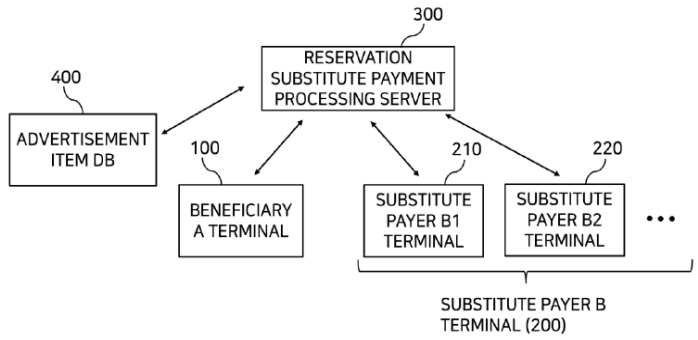

APPLICATIONS PUBLISHED UNDER SECTION 27 - cont'd

(12) SG PATENT APPLICATION

(13) A

(43) Publication Date: 31/01/2024

(21) Application No: 10202250242J

(71) Applicant(s): Ultra-Wireless Pte Ltd

(22) Date of filing: 21/06/2022

(72) Inventor(s):
BAJAJ Ian;
WANG Lei;
ZHOU Qianqian;
NG Li Beng

(30) Priority Data:

(74) Agent(s): MARKS & CLERK SINGAPORE LLP

(51) International Patent Classification:

(54) Title of Invention: COMPUTER-IMPLEMENTED METHOD AND DEVICE FOR MOBILE NODE TRACKING

(57) Abstract:

A computer-implemented method (10) and a device (100) for mobile node tracking are provided. The computer-implemented method (10) for mobile node tracking includes executing on one or more processors the steps of: predicting (12) node positions of a plurality of mobile nodes; receiving (16) ultra-wideband (UWB) ranging data and instantaneous inertial measurement unit (IMU) data from each of the mobile nodes; updating (18) the predicted node positions of the mobile nodes using the UWB ranging data and the instantaneous IMU data; and broadcasting (20) the updated node positions of the mobile nodes from the server to the mobile nodes.

[FIG. 1]

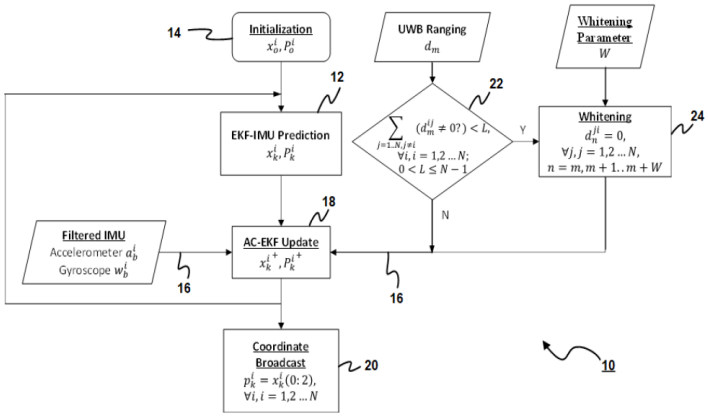

FIG. 1

APPLICATIONS PUBLISHED UNDER SECTION 27 - cont'd

(12) SG PATENT APPLICATION

(13) A

(43) Publication Date: 31/01/2024

(21) Application No: 10202250245Q

(71) Applicant(s): Lemon Inc.

(22) Date of filing: 21/06/2022

(72) Inventor(s): FENG Jiashi; ZHOU Daquan

(30) Priority Data:

(74) Agent(s): MARKS & CLERK SINGAPORE LLP

(51) International Patent Classification: G06N 3/082 G06N 20/00

(54) Title of Invention: MULTI-TASK LEARNING WITH A SHARED FOUNDATION MODEL

(57) Abstract:

A foundation neural network is trained to perform a first computational task. The foundation model has a number of layers, each including a number of functions defined by a set of numerical parameters, and the sets of parameters are trained to teach the foundation neural network the first computational task. Typically, each function receives an input vector (i.e. a plurality of input values), and generates an output vector (i.e. a plurality of output values). The foundation neural network is adapted to form an adapted neural network. In the adapted neural network, for at least one of these functions, a linear transformation is applied to the output (and/or input) values of the function. To learn the second computational task, parameters defining the linear transformation are trained, using a training database of examples of the second computational task, while substantially not changing the numeral parameters defining the functions.

Fig. 2

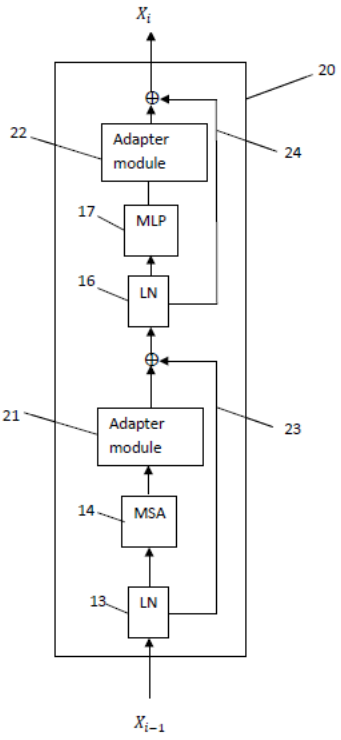

FIG. 2

APPLICATIONS PUBLISHED UNDER SECTION 27 - cont'd

(12) SG PATENT APPLICATION

(13) A

(43) Publication Date: 31/01/2024

(21) Application No: 10202250247Y

(71) Applicant(s): Agile Biz Tech Pte Ltd; Pang You Hin

(22) Date of filing: 21/06/2022

(72) Inventor(s): Pang You Hin, Ng Hock Wah, Kho Hwee Lay Wendy, Lim Boom Tom

(30) Priority Data:

(74) Agent(s): PINTAS-IPHOUSE PTE. LTD.

(51) International Patent Classification:

(54) Title of Invention: SYSTEM AND METHOD FOR MONITORING PURITY OF FLUID

(57) Abstract:

The invention provides a system and a corresponding method for monitoring the purity of fluid. The system comprises a duct (2) connecting to a fluid source (1), which includes a first valve (212) for controlling the fluid flowing from the fluid source (1) into the duct (2), or portions thereof, as a sample, a purity sensor (22) disposed downstream of the first valve (212), and one or more pressure regulators for controlling pressure within the duct (2), or portions thereof. The duct (2), or portions thereof, is of an environment with a desired pressure for measuring a purity level of the sample by the purity sensor (212).

(Fig. 1)

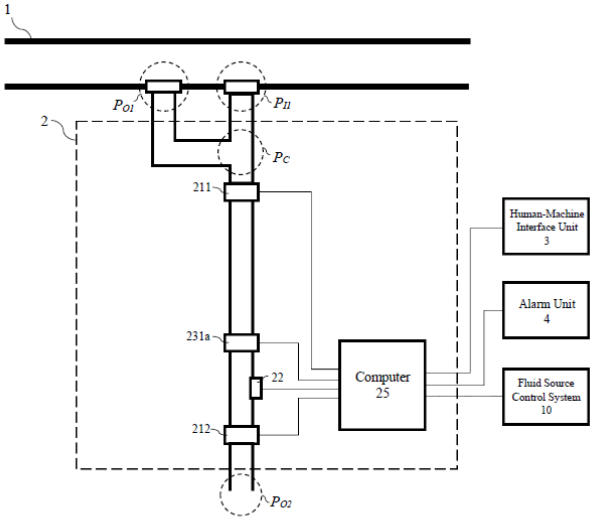

FIG. 1a

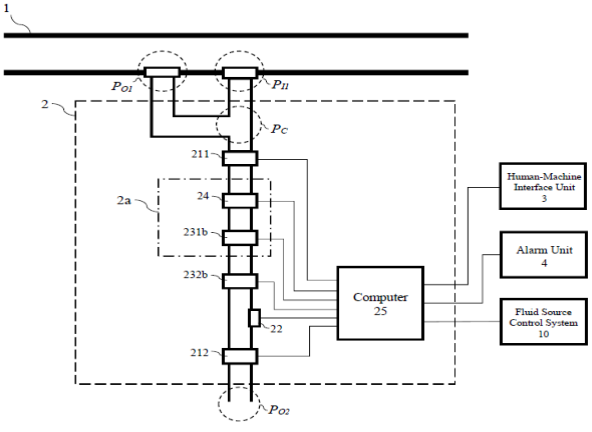

FIG. 1b

APPLICATIONS PUBLISHED UNDER SECTION 27 - cont'd

(12) SG PATENT APPLICATION

(13) A

(43) Publication Date: 31/01/2024

(21) Application No: 10202250258M

(71) Applicant(s): GP Network Asia Pte. Ltd.

(22) Date of filing: 22/06/2022

(72) Inventor(s): HANDA, Ishan; HARLALKA, Priyanka

(30) Priority Data:

(74) Agent(s): SPRUSON & FERGUSON (ASIA) PTE. LTD.

(51) International Patent Classification:

(54) Title of Invention: METHOD AND SYSTEM FOR ADAPTIVELY EXECUTING A PLURALITY OF TASKS

(57) Abstract:

The present disclosure provides methods and systems for adaptively executing a plurality of tasks. In some examples, there is provided a method for adaptively executing a plurality of tasks, comprising: defining, by one or more processors, a schema representing a plurality of tasks, each task comprising a data retrieval and/or data evaluation operation, the schema comprising task information indicating how to execute each of the plurality of tasks; generating, by the one or more processors, a graph representation of the plurality of tasks based on the schema, the graph representation comprising a plurality of nodes, each node of the plurality of nodes corresponding to one of the plurality of tasks; and executing, by the one or more processors, the plurality of tasks based on the graph representation and the task information.

(Fig. 4A)

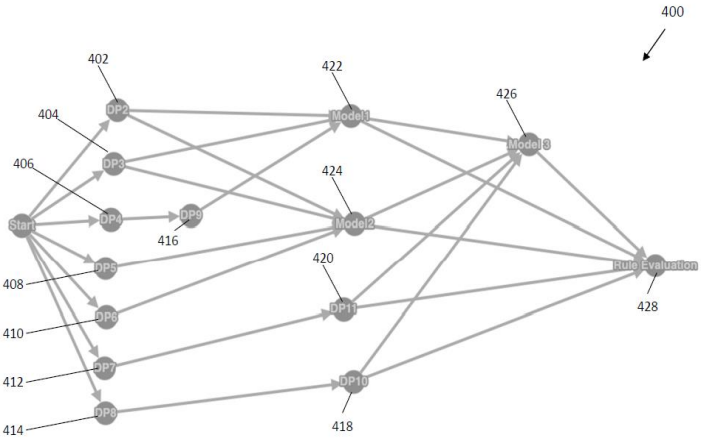

Figure 4A

APPLICATIONS PUBLISHED UNDER SECTION 27 - cont'd

(12) SG PATENT APPLICATION

(13) A

(43) Publication Date: 31/01/2024

(21) Application No: 10202250281V

(71) Applicant(s): ONG Yizhi Kingsfield

(22) Date of filing: 24/06/2022

(72) Inventor(s): ONG Yizhi Kingsfield

(30) Priority Data:

(74) Agent(s): Synergy IP Pte. Ltd.

(51) International Patent Classification:

(54) Title of Invention: DEVICE FOR PAINLESS INJECTION

(57) Abstract:

A device for simulating skin for painless introduction or removal of a needle, the device comprising an enclosure adapted to be worn on a body part of a user, one or more rotatable brushes disposed on a periphery of the enclosure, adapted to touch a part of skin of the user after the device is worn, one or more motors disposed in the enclosure and connected with the one or more rotatable brushes, and a button disposed on the enclosure connected with the one or more motors to actuate the device. On actuation of the button, the one or more motors are configured to rotate the one or more rotatable brushes against the skin. Further, the rotation of one or more rotatable brushes against the skin is configured to stimulate mechano-receptors of the skin to modulate a sensation of pain when a needle is introduced into the skin or removed from the skin.

[Figure 3]

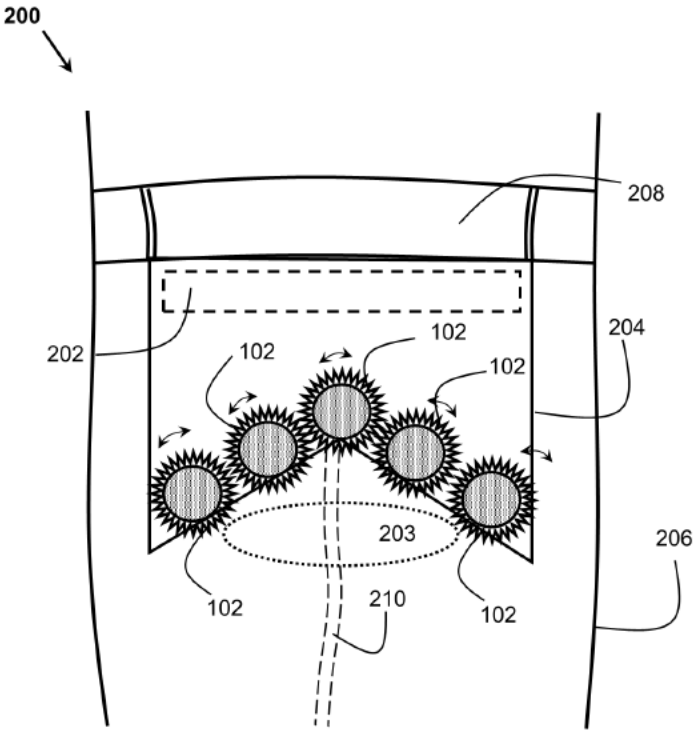

FIG. 3

APPLICATIONS PUBLISHED UNDER SECTION 27 - cont'd

(12) SG PATENT APPLICATION

(13) A

(43) Publication Date: 31/01/2024

(21) Application No: 10202250315J

(71) Applicant(s): GrabTaxi Holdings Pte. Ltd.

(22) Date of filing: 28/06/2022

(72) Inventor(s): FAN, Haijin; WIRAWAN, Hendra Teja; KARN, Ashish Ranjan; CHEN, Wenqing

(30) Priority Data:

(74) Agent(s): SPRUSON & FERGUSON (ASIA) PTE. LTD.

(51) International Patent Classification:

(54) Title of Invention: SERVICE REQUEST ESTIMATED TIME GENERATION SYSTEM AND METHOD

(57) Abstract:

The present disclosure provides a system and a method for generating an estimated time to fulfil a request for a service, the service requiring a service provider to move from one location to another location, the method comprising: identifying an operating variable relating to a current request for a service and a performance metric, the performance metric comprising an accuracy metric in accurately estimating an actual time required to fulfil the previous request for the service; and generating an estimated time to fulfil the current request for the service to provide a desired number of further requests for the service based on the operating variable and the performance metric.

[Figure 5]

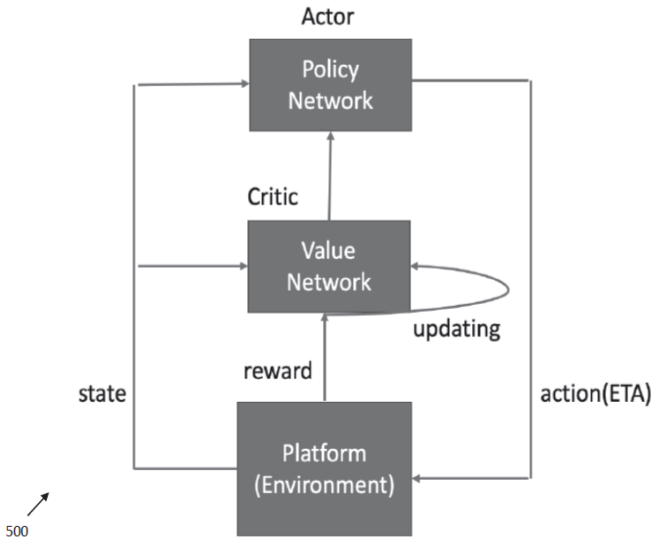

Figure 5

APPLICATIONS PUBLISHED UNDER SECTION 27 - cont'd

(12) SG PATENT APPLICATION

(13) A

(43) Publication Date: 31/01/2024

(21) Application No: 10202250316E

(71) Applicant(s): CENTURY WATER SYSTEMS & TECHNOLOGIES PTE LTD

(22) Date of filing: 28/06/2022

(72) Inventor(s): Zhang Junyou; Liu Jun; Wang Wanghua

(30) Priority Data:

(74) Agent(s): PYPRUS PTE LTD

(51) International Patent Classification:

(54) Title of Invention: METHOD OF MANUFACTURING NANOFILTRATION MEMBRANE AND SYSTEM THEREFOR

(57) Abstract:

The present invention relates to a selective surface charge nanofiltration membrane manufacturing method and system for water purification and wastewater treatment. The method utilizing a simple and easy-scalable pressure assisted tank, containing different types of charged polymer and concentration and cross-linking solution to form selective surface charges nanofiltration membrane. The hollow fiber nanofiltration membrane has posed several advantages in water purification and wastewater treatment, particularly chlorine resistance, high heavy metal rejection, and high throughput.

Fig. 2

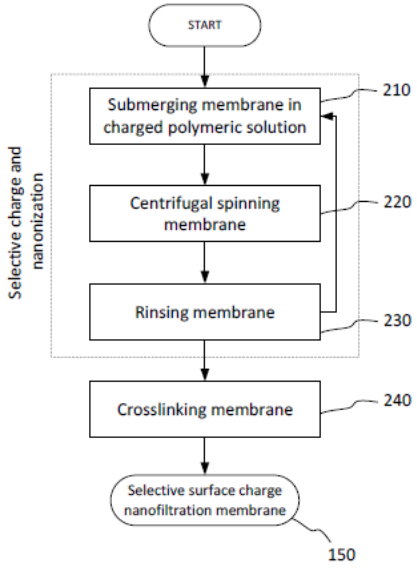

Fig. 2

APPLICATIONS PUBLISHED UNDER SECTION 27 - cont'd

(12) SG PATENT APPLICATION

(13) A

(43) Publication Date: 31/01/2024

(21) Application No: 10202250337V

(71) Applicant(s): Hydroleap Private Limited

(22) Date of filing: 30/06/2022

(72) Inventor(s): Mohammad SHERAFATMAND; Lakshmi JOTHINATHAN

(30) Priority Data:

(74) Agent(s): SPRUSON & FERGUSON (ASIA) PTE. LTD.

(51) International Patent Classification:

(54) Title of Invention: METHOD AND SYSTEM FOR AUTOMATED RESPONSIVE ELECTROCOAGULATION WASTEWATER PROCESSING

(57) Abstract:

[0037] Methods and system for wastewater treatment are provided. According to at least one aspect of the present embodiments, a system for responsive electrocoagulation wastewater processing includes an electrocoagulation (EC) reactor, one or more sensors and a processing means. The EC reactor processes influent waste water while the one or more sensors monitor water quality parameters of the influent waste water. The processing means is coupled to the one or more sensors and determines a predicted chemical oxygen demand (COD) in response to the monitored parameters of the influent wastewater. The processing means is also coupled to the EC reactor for controlling its operation in response to the predicted COD.

FIG. 2

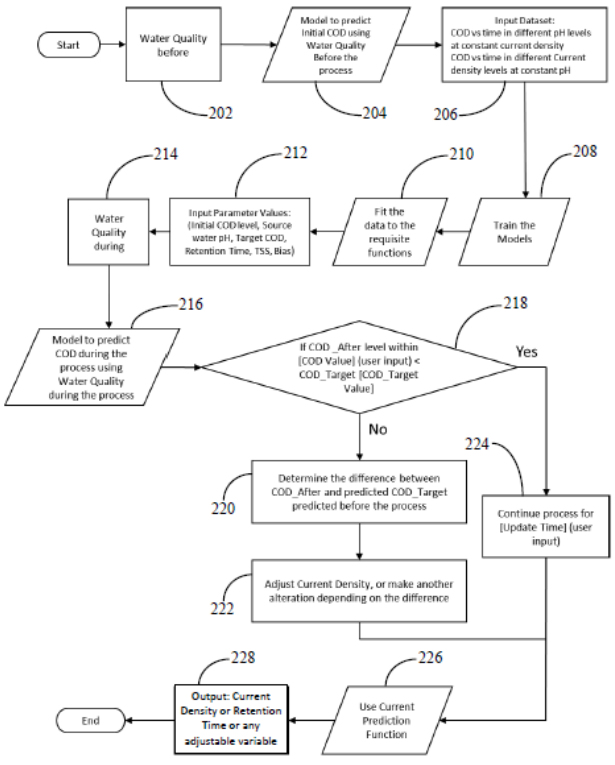

FIG. 2

APPLICATIONS PUBLISHED UNDER SECTION 27 - cont'd

(12) SG PATENT APPLICATION

(13) A

(43) Publication Date: 31/01/2024

(21) Application No: 10202250353D

(71) Applicant(s): Panasonic Intellectual Property Corporation of America

(22) Date of filing: 01/07/2022

(72) Inventor(s): TRAN, Xuan Tuong; SUZUKI, Hidetoshi; YAMAMOTO, Tetsuya; OGAWA, Yoshihiko; KANG, Yang; SIM, Hong Cheng, Michael

(30) Priority Data:

(74) Agent(s): SPRUSON & FERGUSON (ASIA) PTE. LTD.

(51) International Patent Classification:

(54) Title of Invention: INTEGRATING FREQUENCY DOMAIN SPECTRAL SHAPING WITH SPECTRUM EXTENSION AND TONE RESERVATION

(57) Abstract:

The present disclosure provides communication apparatuses and communication methods for integrating frequency domain spectral shaping (FDSS) with spectrum extension and tone reservation. The communication apparatuses include a communication apparatus comprising: circuitry, which in operation: determines one or more frequency components for a spectrum-extension (SE) part and one or more other frequency components for a non-SE part of a signal based on control information relating to the SE part and the non-SE part; generates a compensating signal based on the one or more frequency components of the SE part; and generates a reduced peak signal based on the compensating signal; and a transmitter, which in operation, transmits the reduced peak signal.

Fig. 15

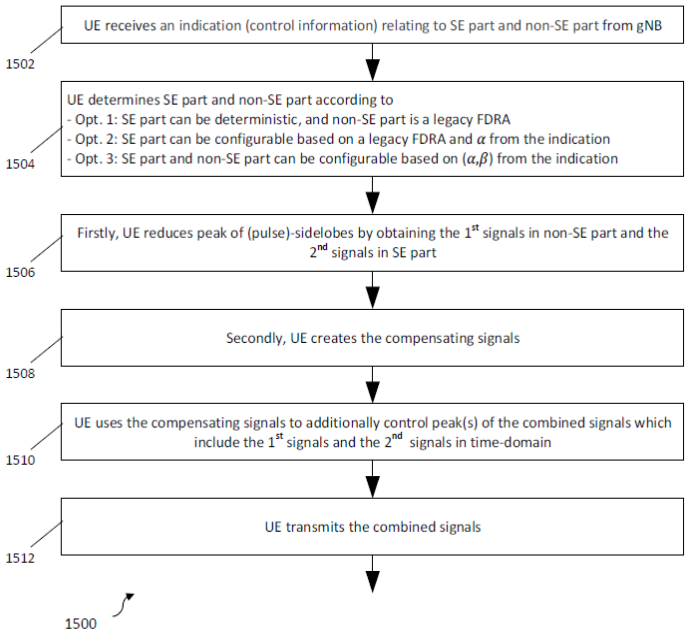

Fig. 15

APPLICATIONS PUBLISHED UNDER SECTION 27 - cont'd

(12) SG PATENT APPLICATION

(13) A

(43) Publication Date: 31/01/2024

(21) Application No: 10202250357T

(71) Applicant(s): Venti Technologies

(22) Date of filing: 01/07/2022

(72) Inventor(s):
QIN, Lei;
ABOLFAZLI ESFAHANI, Mahdi;
DU, Xinxin

(30) Priority Data:

(74) Agent(s): MIRANDAH ASIA (SINGAPORE) PTE LTD

(51) International Patent Classification:

(54) Title of Invention: DOCKING SYSTEM AND METHODS FOR AUTONOMOUS VEHICLES

(57) Abstract:

Systems, methods, and computer program products are described herein for autonomously docking an autonomous vehicle. Data including (i) an indication that the autonomous vehicle is within a docking location and (ii) an adjustment distance to place the autonomous vehicle within a threshold distance of the docking location is received. An external reference point detection module identifies an external reference point to the autonomous vehicle. A docking module incrementally adjusts a position of the autonomous vehicle in a first axis based on a distance between the autonomous vehicle and the external reference point until either (i) the autonomous vehicle is within the threshold distance of the docking location or (ii) a number of adjustments exceeds an adjustment maximum.

[Figure 2]

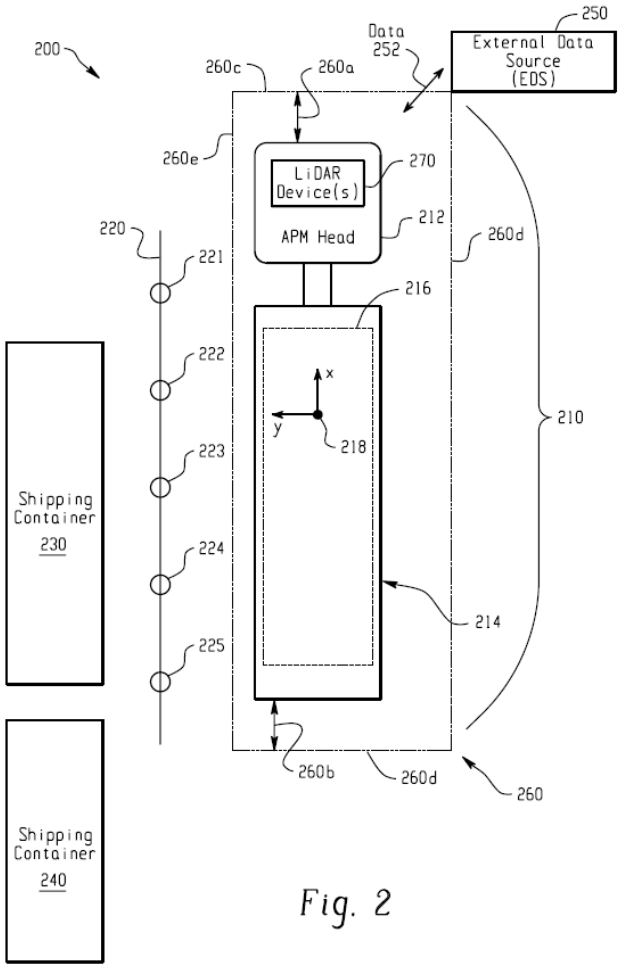

Fig. 2

APPLICATIONS PUBLISHED UNDER SECTION 27 - cont'd

(12) SG PATENT APPLICATION

(13) A

(43) Publication Date: 31/01/2024

(21) Application No: 10202250793G

(71) Applicant(s): NATIONAL CHENG KUNG UNIVERSITY

(22) Date of filing: 19/08/2022

(72) Inventor(s): Chang, Chia-Wei; Tseng, I-Hsien; Su, Yen-Hsun

(30) Priority Data: 111206831 28/06/2022 TAIWAN

(74) Agent(s): ADASTRA INTELLECTUAL PROPERTY PTE. LTD.

(51) International Patent Classification:

(54) Title of Invention: GRAPHENE NANOSHEET BY MULTIPLE MEDIUM CONTROLLED ZERO-POINT POTENTIAL MODULATION AND MANUFACTURING METHOD OF THE SAME

(57) Abstract:

A graphene nanosheet by multiple medium controlled zero-point potential modulation and a manufacturing method of the same. The graphene nanosheet by multiple medium controlled zero-point potential modulation at least comprises a target object and a multiple medium surface charge modulation substance, the target object comprises graphite or graphite derivatives, and the multiple medium surface charge modulation substance is combined on a surface of the target object, thereby a zeta potential of the surface of the target object is modulated. The invention is capable of adjusting functions and properties of raw materials of the target object by mixing graphite and its derivatives with the multiple medium surface charge modulation substance and through modulating and controlling zero-point potential energy.

Figure 1

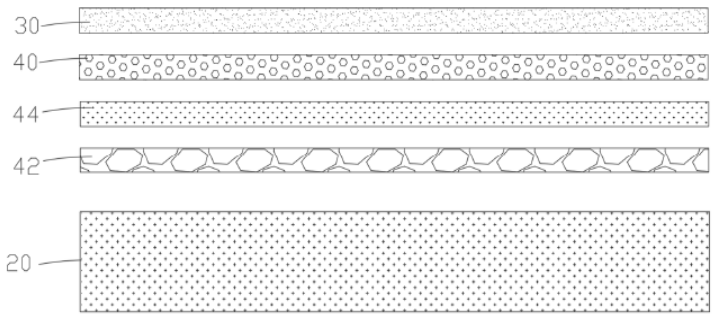

FIG. 1

APPLICATIONS PUBLISHED UNDER SECTION 27 - cont'd

(12) SG PATENT APPLICATION

(13) A

(43) Publication Date: 31/01/2024

(21) Application No: 10202250851Q

(71) Applicant(s): Fengshuo WANG

(22) Date of filing: 29/08/2022

(72) Inventor(s): Fengshuo WANG

(30) Priority Data: 202221533222.6 20/06/2022 CHINA

(74) Agent(s): CHINAHONGKONG IP LIMITED

(51) International Patent Classification:

(54) Title of Invention: UWB-BASED LOW-DELAY LOSSLESS DIGITAL AUDIO TRANSMISSION UNIT AND SYSTEM, AND ELECTRONIC DEVICE

(57) Abstract:

A UWB-based low-delay lossless digital audio transmission unit, including an audio input module, an audio processing module, a radio frequency transceiving module and a UWB processing module. The audio processing module is in signal connection with the audio input module and receives a first digital audio signal from the audio input module and transmits the first digital audio signal to the UWB processing module. The UWB processing module is connected with the audio processing module and the radio frequency transceiving module. The radio frequency transceiving module is connected with another digital audio transmission unit to send it the first digital audio signal processed by the UWB processing module and to receive a second digital audio signalfrom the another digital audio transmission unit. A system and an electronic device having the UWB-based low-delay lossless digital audio transmission unit are also provided.

Fig. 1

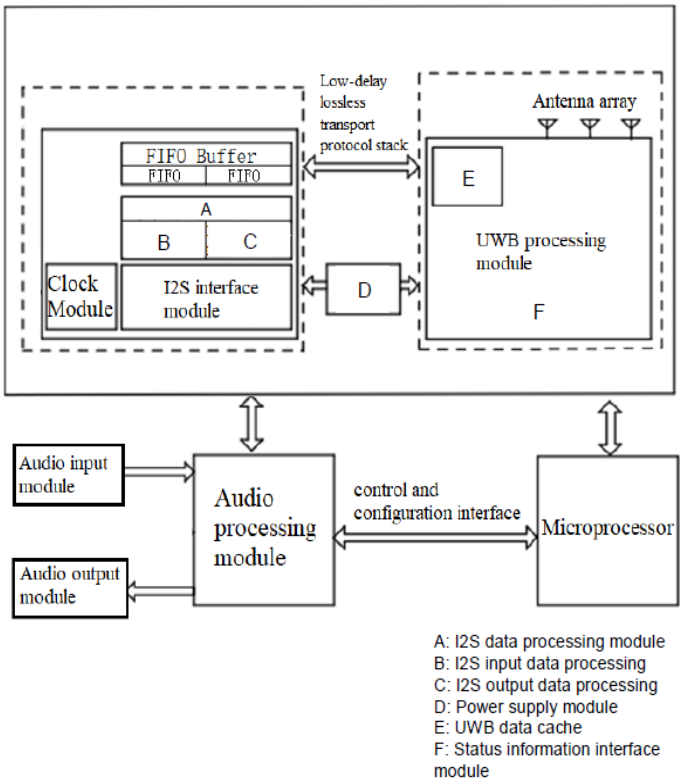

FIG.1

APPLICATIONS PUBLISHED UNDER SECTION 27 - cont'd

(12) SG PATENT APPLICATION

(13) A

(43) Publication Date: 31/01/2024

(21) Application No: 10202250958T

(71) Applicant(s): HITRUST.COM INCORPORATED

(22) Date of filing: 09/09/2022

(72) Inventor(s): CHEN HSIN-HUNG; TSAI JEN-HAO; HO SEE SANG

(30) Priority Data: 111121217 08/06/2022 TAIWAN

(74) Agent(s): Henry Goh (S) Pte Ltd

(51) International Patent Classification:

(54) Title of Invention: METHOD AND SYSTEM FOR INFERRING DEVICE FINGERPRINT

(57) Abstract:

A method for inferring device fingerprint, performed by a processor, includes: obtaining a current device dataset including current device features from a user interface operating on a user device, when the current device dataset further includes a current protocol address and a device fingerprint pointer table does not include a current number of a target device fingerprint pointer corresponding to the current protocol address, obtaining a history protocol address, first history device features and first history number of the target device fingerprint pointer, when the current protocol address matches the history protocol address and the current device features matches the first history device features, using one first history number as the current number, and when the current protocol address does not match the history protocol address and the current device features matches the first history device features, setting the current number to point to a new device fingerprint.

FIG. 2

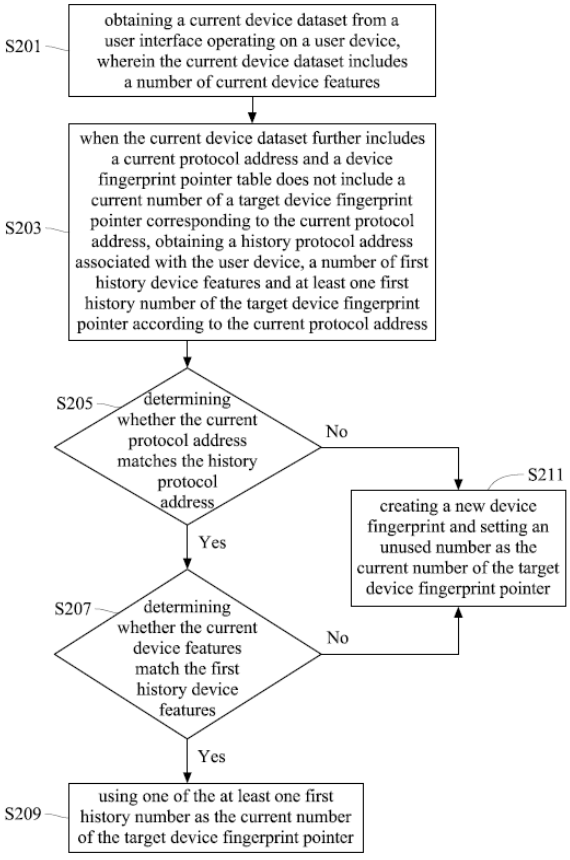

FIG. 2

APPLICATIONS PUBLISHED UNDER SECTION 27 - cont'd

(12) SG PATENT APPLICATION

(13) A

(43) Publication Date: 31/01/2024

(21) Application No: 10202260001W

(71) Applicant(s): ImmunoScape Pte. Ltd.

(22) Date of filing: 07/11/2022

(72) Inventor(s): Dan MacLeod; Katja Fink; Michael Fehlings; Eng Loan Ping; Kan Xing Wu; Alessandra NARDIN

(30) Priority Data: 10202250175C 15/06/2022 SINGAPORE

(74) Agent(s): MORGAN LEWIS STAMFORD LLC

(51) International Patent Classification:

(54) Title of Invention: Human T cell Receptors and uses thereof

(57) Abstract:

The present application describes novel T cell receptors specifically binding tumor antigen derived peptides, engineered T cells expressing these receptors, nucleic acids encoding these T cell receptors and methods of using T cells expressing these engineered T cells in adoptive cell transfer to treat diseases in a subject.

[Figure 1]

FIGURE 1

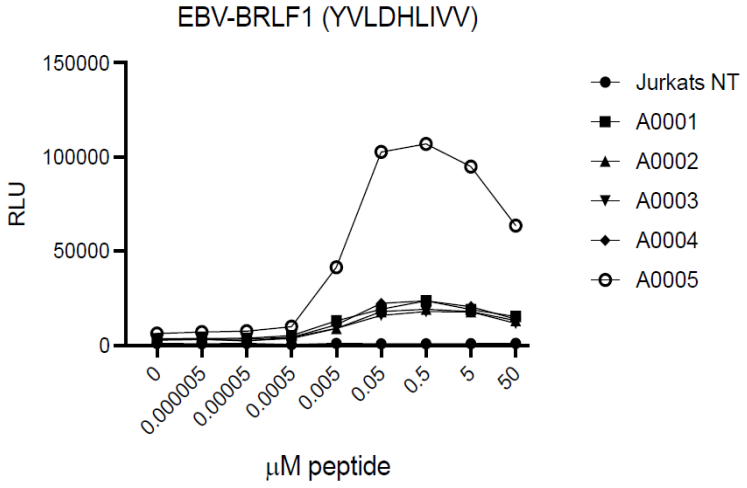

APPLICATIONS PUBLISHED UNDER SECTION 27 - cont'd

(12) SG PATENT APPLICATION

(13) A

(43) Publication Date: 31/01/2024

(21) Application No: 10202260111Q

(71) Applicant(s): GrabTaxi Holdings Pte. Ltd.

(22) Date of filing: 16/11/2022

(72) Inventor(s): LE, Thanh Dat; WU, Hao; XU, Nuo; LIU, Jiang; KOERTGE, Harald; DING, Chunda

(30) Priority Data: PCT/CN2022/101286 24/06/2022 CHINA

(74) Agent(s): SPRUSON & FERGUSON (ASIA) PTE. LTD.

(51) International Patent Classification:

(54) Title of Invention: METHOD AND SYSTEM FOR ADAPTIVELY LOCATING A MOVING OBJECT RELATIVE TO A TARGET OBJECT

(57) Abstract:

The present disclosure provides methods and systems for adaptively locating a moving object relative to a target object. In some examples, there is provided a method for adaptively locating a moving object relative to a target object, the method comprising: identifying a latitude and longitude of a location of the target object, in response to a request message including location information of the target object; identifying a location information of a moving object in the proximity of the target object based on the identified latitude and longitude of the target object; and adaptively locating the moving object relative to the target object based on the identified location information.

(Fig. 6C)

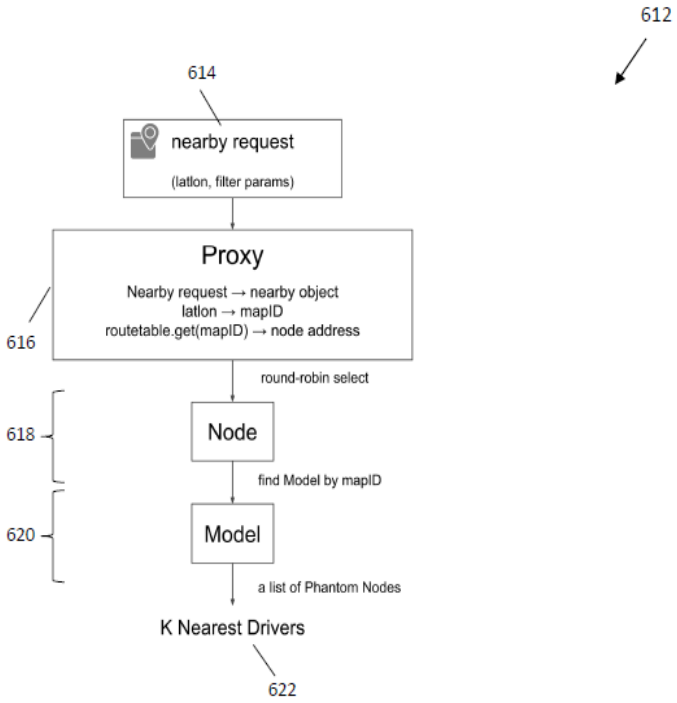

Figure 6C

APPLICATIONS PUBLISHED UNDER SECTION 27 - cont'd

(12) SG PATENT APPLICATION

(13) A

(43) Publication Date: 31/01/2024

(21) Application No: 10202260167P

(71) Applicant(s): Jiangsu Zhengjin Special Vehicle Manufacturing Co., Ltd.

(22) Date of filing: 23/11/2022

(72) Inventor(s): Houdong Sun; Yang Sun

(30) Priority Data: 202210783502.0 27/06/2022 CHINA

(74) Agent(s): ORION IP LLP

(51) International Patent Classification:

(54) Title of Invention: A DOUBLE-TRACTION TRANSFER VEHICLE

(57) Abstract:

The invention relates to a double-traction transfer vehicle used for trailers, comprising a front traction mechanism, two traction bars arranged in a cross, and a transfer frame connected with the trailer and provided with a running device, one end of each traction bar near the front traction mechanism is connected to the front traction mechanism by the retractor, and one end of each traction bar near the transfer frame is hinged to the transfer frame, the top of the transfer frame is provided with a saddle for connection to the trailer. The invention can meet the transportation requirements of one tractor pulling multiple trailers, greatly reduce the cost of equipment for vehicle purchase and labor costs, alleviate the road blockage pressure caused by the operation of multiple tractors wherein each tractor only pull one trailer at the same time, and improve the efficiency of the vehicle for transporting goods.

Figure 2

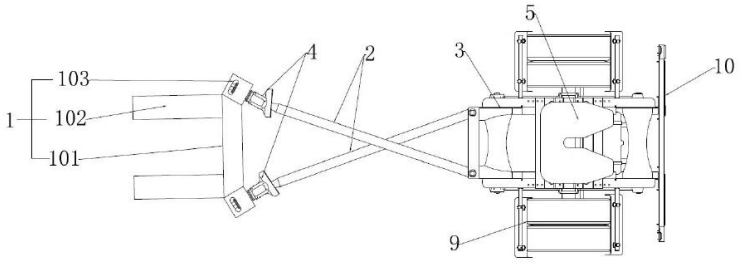

Figure 2

APPLICATIONS PUBLISHED UNDER SECTION 27 - cont'd

(12) SG PATENT APPLICATION

(13) A

(43) Publication Date: 31/01/2024

(21) Application No: 10202300048P

(71) Applicant(s): SAMSUNG ELECTRONICS CO., LTD.

(22) Date of filing: 06/01/2023

(72) Inventor(s): Hoduk Cho; Seongbo Shim; Hyungjong Bae; Chan Hwang

(30) Priority Data: 10-2022-0068201 03/06/2022 REPUBLIC OF KOREA

(74) Agent(s): VIERING, JENTSCHURA & PARTNER LLP

(51) International Patent Classification:

(54) Title of Invention: EXTREME ULTRAVIOLET LITHOGRAPHY DEVICE AND METHOD OF OPERATING EXTREME ULTRAVIOLET LITHOGRAPHY DEVICE

(57) Abstract:

An operating method of an extreme ultraviolet (EUV) lithography device includes defining a target image to render an illumination system, assigning priorities to respective positions of facets of a pupil facet mirror corresponding to the target image, assigning a mirror according to the assigned priorities using linear programming, generating the illumination system by selecting one of the facets of the pupil facet mirror based on a symmetry criterion, and converting mirror assignment information and source map information corresponding to the selected facet into a form recognizable by an EUV scanner.

FIG. 4

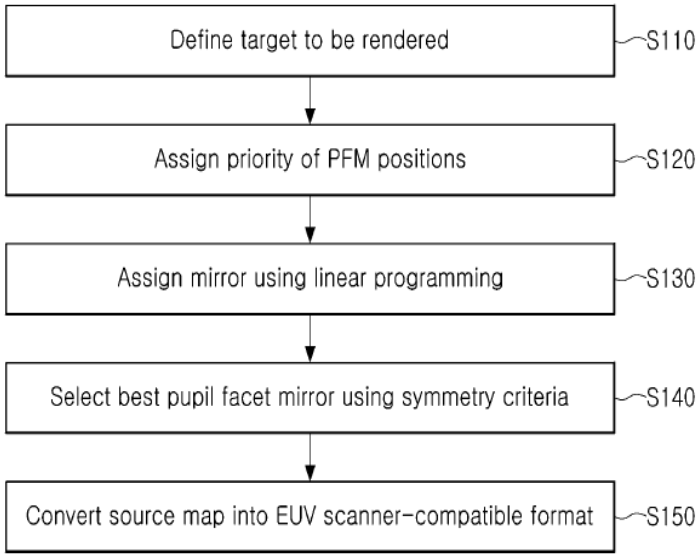

FIG. 4

APPLICATIONS PUBLISHED UNDER SECTION 27 - cont'd

(12) SG PATENT APPLICATION

(13) A

(43) Publication Date: 31/01/2024

(21) Application No: 10202300132R

(71) Applicant(s): SAMSUNG ELECTRONICS CO., LTD.

(22) Date of filing: 17/01/2023

(72) Inventor(s): Jungmin PARK; Hanjin LIM; Hyungsuk JUNG

(30) Priority Data: 10-2022-0070569 10/06/2022 REPUBLIC OF KOREA

(74) Agent(s): VIERING, JENTSCHURA & PARTNER LLP

(51) International Patent Classification:

(54) Title of Invention: SEMICONDUCTOR DEVICE

(57) Abstract:

A semiconductor device including a substrate, a plurality of lower electrodes on the substrate, a dielectric layer stack covering the lower electrodes, and an upper electrode covering the dielectric layer stack may be provided. The dielectric layer stack may include a first dielectric layer on the plurality of lower electrodes, the first dielectric layer including a material having anti-ferroelectricity or paraelectricity, and a second dielectric layer between the first dielectric layer and the upper electrode, the second dielectric layer including a material having ferroelectricity. The upper electrode may include a first upper electrode layer including an N-type impurity.

FIG. 2

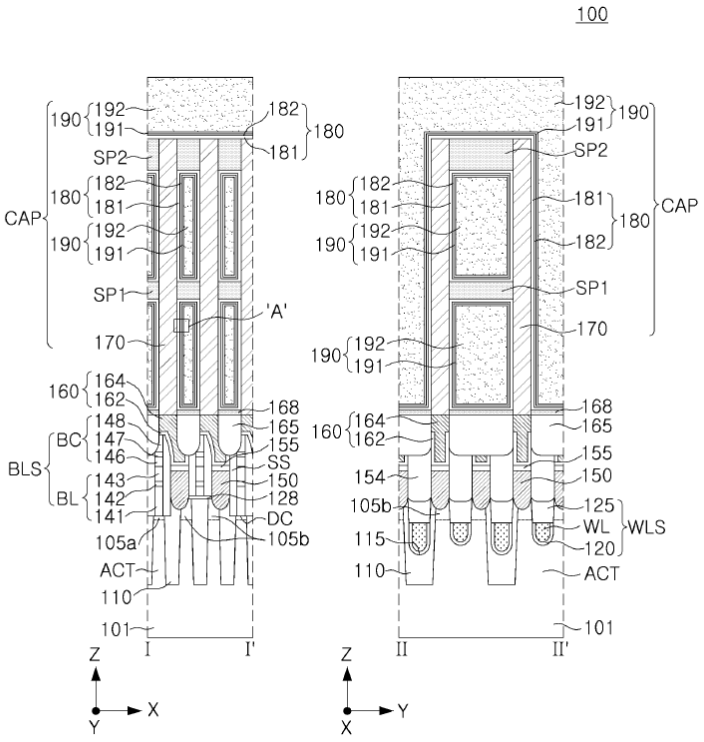

FIG. 2

APPLICATIONS PUBLISHED UNDER SECTION 27 - cont'd

(12) SG PATENT APPLICATION

(13) A

(43) Publication Date: 31/01/2024

(21) Application No: 10202300205S

(71) Applicant(s): Samsung Electronics Co., Ltd.

(22) Date of filing: 26/01/2023

(72) Inventor(s): KISEOK LEE; KEUNNAM KIM; YONGSEOK KIM; HYUNCHEOL KIM; KYUNGHWAN LEE

(30) Priority Data: 10-2022-0068422 03/06/2022 REPUBLIC OF KOREA

(74) Agent(s): VIERING, JENTSCHURA & PARTNER LLP

(51) International Patent Classification:

(54) Title of Invention: SEMICONDUCTOR MEMORY DEVICE

(57) Abstract:

A semiconductor memory device includes a first channel pattern and a second channel pattern stacked on a substrate, a word line disposed between the first and second channel patterns and that extends in a first direction parallel to a top surface of the substrate, a data storage pattern disposed between a top surface of the word line and the first channel pattern and between a bottom surface of the word line and the second channel pattern, a bit line that extends in a second direction perpendicular to the top surface of the substrate and that is connected to first end portions of the first and second channel patterns, and a source line that extends in the second direction and is connected to second end portions of the first and second channel patterns.

FIG. 4

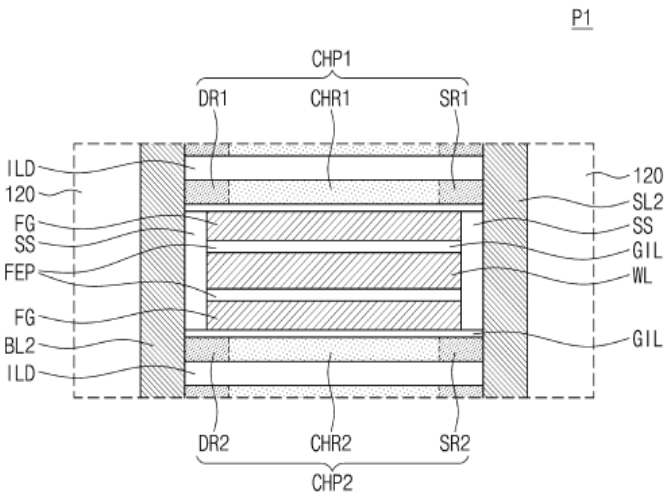

APPLICATIONS PUBLISHED UNDER SECTION 27 - cont'd

(12) SG PATENT APPLICATION

(13) A

(43) Publication Date: 31/01/2024

(21) Application No: 10202300217Y

(71) Applicant(s): TOSHIBA ELEVATOR KABUSHIKI KAISHA

(22) Date of filing: 27/01/2023

(72) Inventor(s): Takuya Hosokawa; Rika Kato; Hidemitsu Suzuki

(30) Priority Data: 2022-095797 14/06/2022 JAPAN

(74) Agent(s): SPRUSON & FERGUSON (ASIA) PTE. LTD.

(51) International Patent Classification:

(54) Title of Invention: HALL DESTINATION CONTROLLER

(57) Abstract:

According to one embodiment, a hall destination controller (20) scans a two-dimensional code including destination floor information indicating the passenger's destination floor and date-and-time information indicating the prepared date-and-time of the two-dimensional code. The hall destination controller (20) determines, based on the destination floor information and the date-and-time information included in the two-dimensional code scanned, whether or not a registration operation is carried out double by one passenger, and when it is determined that no double registration operation is carried out by one passenger, generates a hall call, and when it is determined that a registration operation is carried out double by one passenger, does not generate a hall call.

FIGURE 4

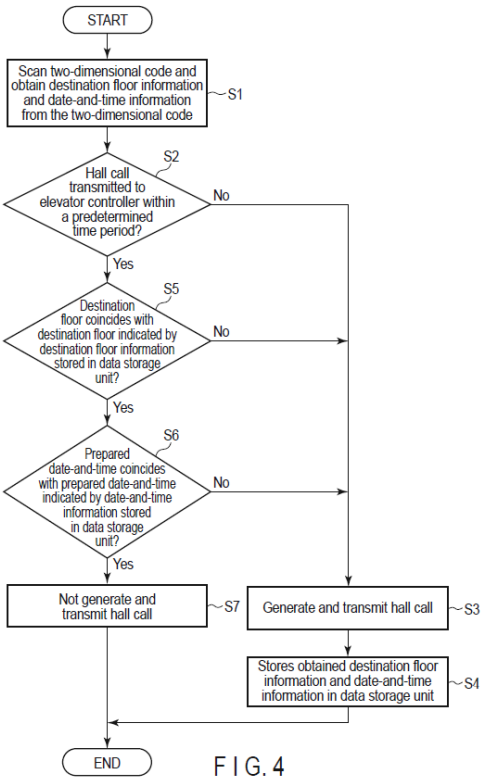

FIG. 4

APPLICATIONS PUBLISHED UNDER SECTION 27 - cont'd

(12) SG PATENT APPLICATION

(13) A

(43) Publication Date: 31/01/2024

(21) Application No: 10202300239U

(71) Applicant(s): TOSHIBA ELEVATOR KABUSHIKI KAISHA

(22) Date of filing: 30/01/2023

(72) Inventor(s): Michiomi Abe

(30) Priority Data:
2022-099006
20/06/2022
JAPAN

(74) Agent(s): SPRUSON & FERGUSON (ASIA) PTE. LTD.

(51) International Patent Classification:

(54) Title of Invention: ELEVATOR SYSTEM

(57) Abstract:

According to one embodiment, an elevator system include a plurality of first radio signal devices (25a,25b,25c) individually installed near entrances of the respective cars at a hall so as to be communicably connected to each other. Each of the first radio signal devices (25a,25b,25c) include a connection control unit (41b) connecting, when one of the first radio signal devices (25a,25b,25c) is receiving a signal of a mobile terminal other than the mobile terminal, of the first radio signal devices (25a,25b,25c), another first radio signal device capable of receiving a signal of the mobile terminal to the mobile terminal.

FIGURE 1

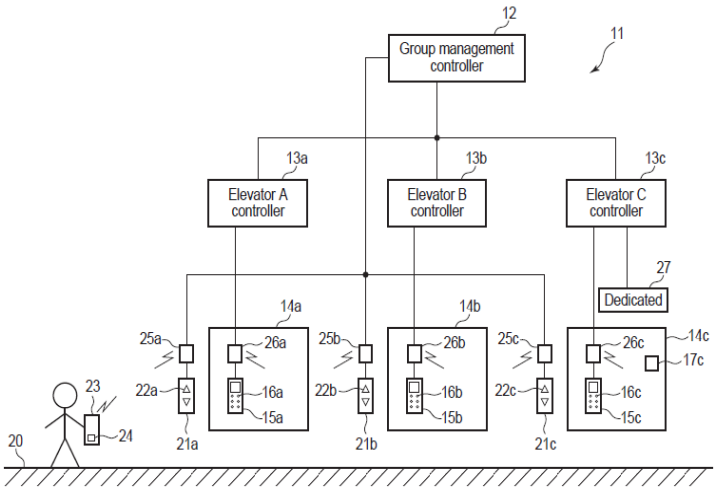

FIG. 1

APPLICATIONS PUBLISHED UNDER SECTION 27 - cont'd

(12) SG PATENT APPLICATION

(13) A

(43) Publication Date: 31/01/2024

(21) Application No: 10202300249T

(71) Applicant(s): TOSHIBA ELEVATOR KABUSHIKI KAISHA

(22) Date of filing: 31/01/2023

(72) Inventor(s): Takuya Hosokawa; Hidemitsu Suzuki

(30) Priority Data: 2022-097972 17/06/2022 JAPAN

(74) Agent(s): SPRUSON & FERGUSON (ASIA) PTE. LTD.

(51) International Patent Classification:

(54) Title of Invention: HALL DESTINATION CONTROLLER

(57) Abstract:

According to one enbodiment, a hall destination controller (20) includes a scan unit (21) and a control unit (22). The scan unit (21) scans a two-dimensional code. The control unit (22) determines whether the two-dimensional code scanned by the scan unit (21) is a two-dimensional code for data settings or a two-dimensional code for call registration. The control unit (22) changes, when the two-dimensional code scanned by the scan unit (21) is a two-dimensional code for data settings, settings of the hall destination controller (20) by using the two-dimensional code for data settings. The control unit (22) generates, when the two-dimensional code scanned by the scan unit (21) is a two-dimensional code for call registration, a hall call by using the two-dimensional code for call registration.

FIGURE 5

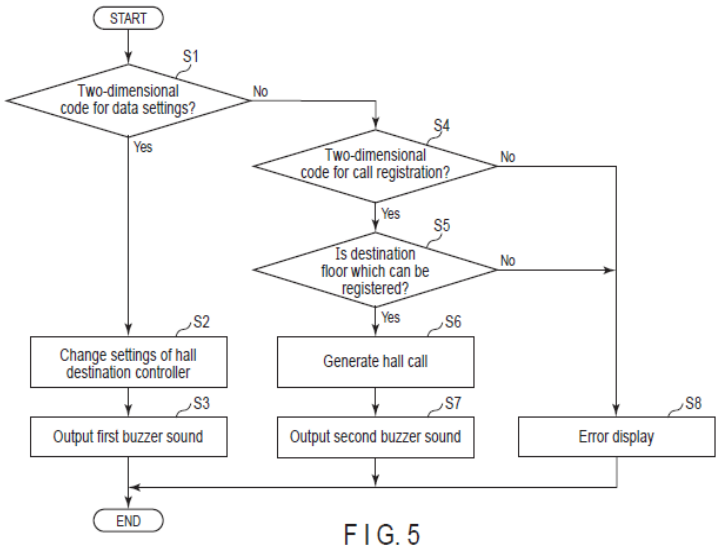

FIG. 5

APPLICATIONS PUBLISHED UNDER SECTION 27 - cont'd

(12) SG PATENT APPLICATION

(13) A

(43) Publication Date: 31/01/2024

(21) Application No: 10202300480X

(71) Applicant(s): Samsung Electronics Co., Ltd.

(22) Date of filing: 24/02/2023

(72) Inventor(s): KIM, Da Hye; KIM, Gyeom; KIM, Jin Bum; JUNG, Su Jin; CHUN, Kyung Bin

(30) Priority Data: 10-2022-0075952 22/06/2022 REPUBLIC OF KOREA

(74) Agent(s): VIERING, JENTSCHURA & PARTNER LLP

(51) International Patent Classification:

(54) Title of Invention: SEMICONDUCTOR DEVICES

(57) Abstract:

A semiconductor device having improved performance and reliability. The semiconductor device may include a lower pattern extending in a first direction, and a plurality of sheet patterns spaced apart from the lower pattern in a second direction perpendicular to the first direction. A plurality of gate structures may be on the lower pattern and spaced apart in the first direction, and a source/drain pattern, which may include a semiconductor liner film and a semiconductor filling film on the semiconductor liner film. A liner recess that is defined by an inner surface of the semiconductor liner film may include a plurality of width extension regions, and a width of each width extension region in the first direction may increase and then decreases, as a distance increases in the second direction from an upper surface of the lower pattern.

FIG. 2

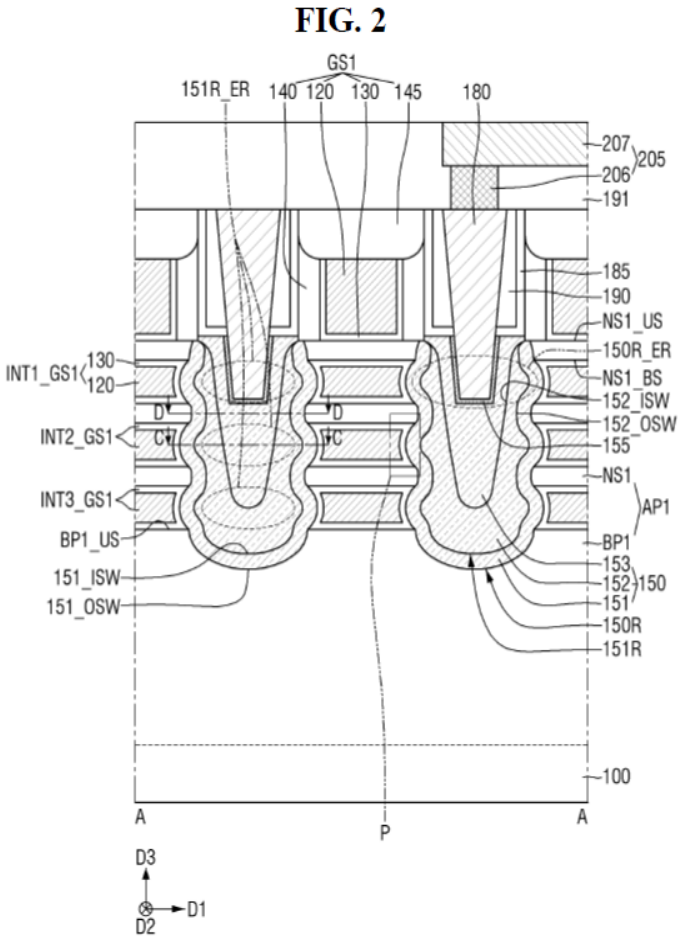

APPLICATIONS PUBLISHED UNDER SECTION 27 - cont'd

(12) SG PATENT APPLICATION

(13) A

(43) Publication Date: 31/01/2024

(21) Application No: 10202300501P

(71) Applicant(s): Samsung Electronics Co., Ltd.

(22) Date of filing: 27/02/2023

(72) Inventor(s): KYUNGHO KIM; KI HWAN KIM; KANG HUN MOON; CHOEUN LEE; YONGUK JEON

(30) Priority Data: 10-2022-0069384 08/06/2022 REPUBLIC OF KOREA

(74) Agent(s): VIERING, JENTSCHURA & PARTNER LLP

(51) International Patent Classification:

(54) Title of Invention: SEMICONDUCTOR DEVICE AND METHOD OF MANUFACTURING SAME

(57) Abstract:

A semiconductor device includes; a substrate including an active pattern, a channel pattern on the active pattern, the channel pattern including a plurality of spaced apart and vertically stacked semiconductor patterns, a source/drain pattern connected to the plurality of semiconductor patterns, a gate electrode on the plurality of semiconductor patterns, the gate electrode including a portion interposed between adjacent ones of the plurality of semiconductor patterns, and an inner spacer interposed between the portion of the gate electrode and the source/drain pattern, wherein the inner spacer is crystalline metal oxide is expressed by a formula (MO), wherein (O) is an oxygen atom, and (M) is a metal atom selected from a group consisting of Mg, Be, and Ga.

FIG. 6A

FIG. 6A

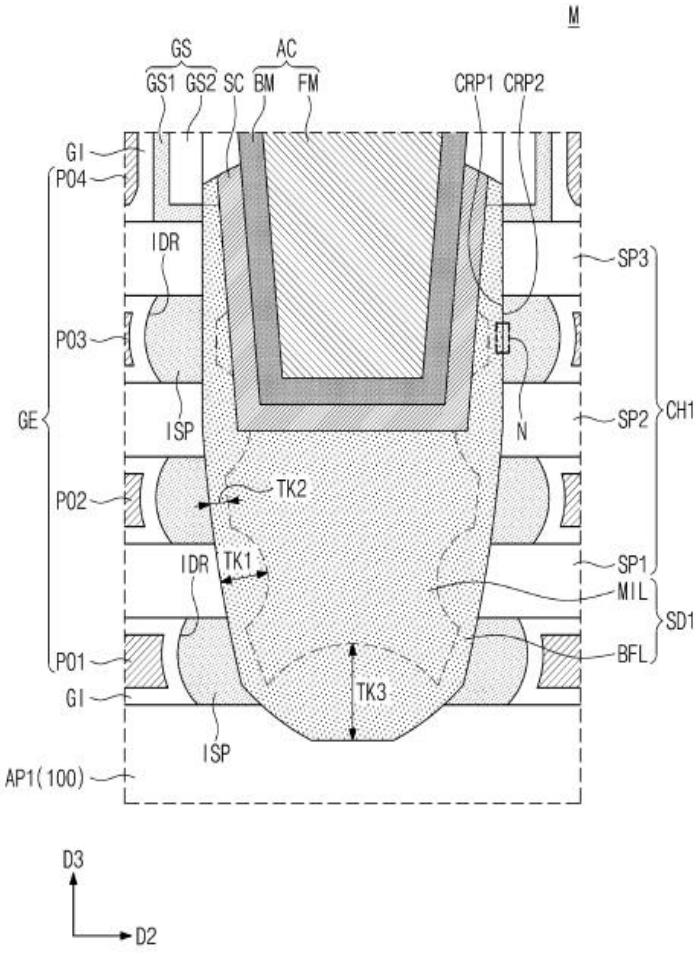

APPLICATIONS PUBLISHED UNDER SECTION 27 - cont'd

(12) SG PATENT APPLICATION

(13) A

(43) Publication Date: 31/01/2024

(21) Application No: 10202300522W

(71) Applicant(s): Samsung Electronics Co., Ltd.

(22) Date of filing: 28/02/2023

(72) Inventor(s): SUNG, Yoo Ri; KIM, Ju Youn; SEO, Myung Soo; LEE, Ki Hwan

(30) Priority Data: 10-2022-0071340 13/06/2022 REPUBLIC OF KOREA

(74) Agent(s): VIERING, JENTSCHURA & PARTNER LLP

(51) International Patent Classification:

(54) Title of Invention: SEMICONDUCTOR DEVICE

(57) Abstract:

A semiconductor device includes a substrate that includes a first region and a second region, a first active pattern on the first region and that extends in a first horizontal direction, a second active pattern on the second region and that extends in the first horizontal direction, a first etch stop layer on the first active pattern, a second etch stop layer on the second active pattern, a plurality of first nanosheets on the first etch stop layer and that are stacked in a vertical direction and include silicon germanium (SiGe), a plurality of second nanosheets on the second etch stop layer and that are stacked in the vertical direction, a first gate electrode on the first etch stop layer and that extends in a second horizontal direction, and a second gate electrode disposed on the second etch stop layer and that extends in the second horizontal direction.

FIG. 2

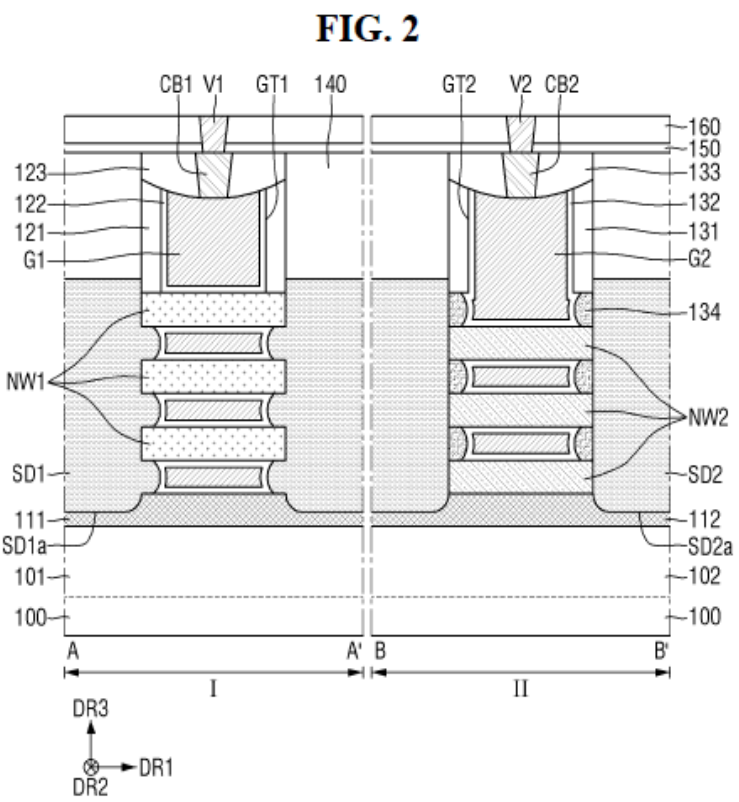

APPLICATIONS PUBLISHED UNDER SECTION 27 - cont'd

(12) SG PATENT APPLICATION

(13) A

(43) Publication Date: 31/01/2024

(21) Application No: 10202300531S

(71) Applicant(s): Samsung Electronics Co., Ltd.

(22) Date of filing: 28/02/2023

(72) Inventor(s): CHO, Cheol Jin; PARK, Young-Lim; JUNG, Kyoo Ho

(30) Priority Data: 10-2022-0072260 14/06/2022 REPUBLIC OF KOREA

(74) Agent(s): VIERING, JENTSCHURA & PARTNER LLP

(51) International Patent Classification:

(54) Title of Invention: CAPACITOR STRUCTURE, SEMICONDUCTOR MEMORY DEVICE INCLUDING THE STRUCTURE, AND METHOD FOR MANUFACTURING THE STRUCTURE

(57) Abstract:

A capacitor structure includes lower and electrodes, and a capacitor dielectric film interposed therebetween. The lower electrode includes a lower electrode film including a first metal element, a first doped oxide film including a second metal element and an oxide of the first metal element, and a first metal oxide film. The first metal oxide film includes an oxide of the first metal element and is free of the second metal element. The upper electrode includes an upper electrode film including the first metal element, a second doped oxide film including the second metal element and an oxide of the first metal element, and a second metal oxide film that includes an oxide of the first metal element, and is free of the second metal element.

FIG. 1

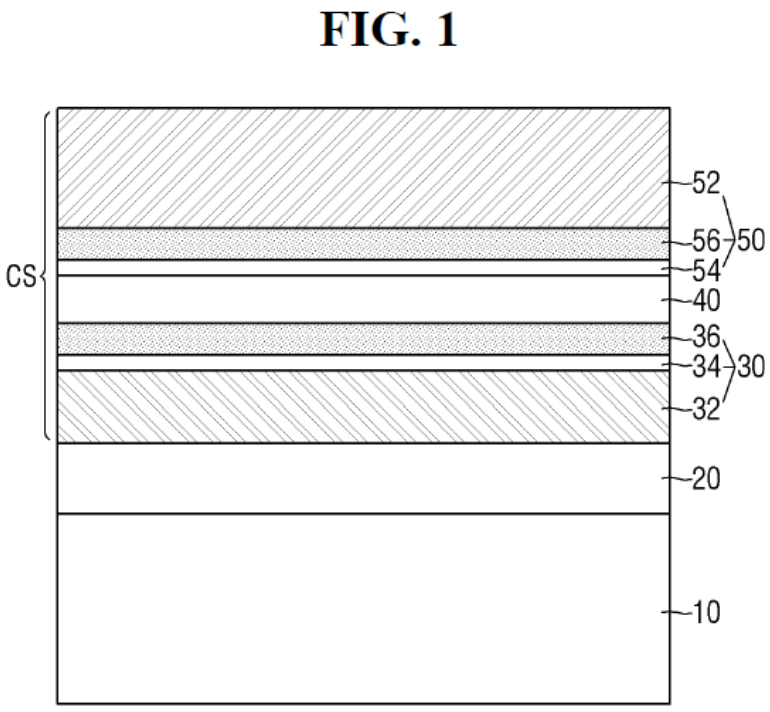

APPLICATIONS PUBLISHED UNDER SECTION 27 - cont'd

(12) SG PATENT APPLICATION

(13) A

(43) Publication Date: 31/01/2024

(21) Application No: 10202300547W

(71) Applicant(s): Samsung Electronics Co., Ltd.

(22) Date of filing: 01/03/2023

(72) Inventor(s): KIM, Hyo Jin; LEE, Sang Moon; KIM, Jin Bum; NAM, Yong Jun

(30) Priority Data: 10-2022-0073910 17/06/2022 REPUBLIC OF KOREA

(74) Agent(s): VIERING, JENTSCHURA & PARTNER LLP

(51) International Patent Classification:

(54) Title of Invention: SEMICONDUCTOR DEVICE AND METHOD FOR FABRICATING THE SAME

(57) Abstract:

A semiconductor device includes a lower pattern extending in a first direction, a first blocking structure which is on the lower pattern and includes at least one first blocking film comprising an oxygen-doped crystalline silicon film, a source/drain pattern on the first blocking structure, and a gate structure which extends in a second direction on the lower pattern and includes a gate electrode and a gate insulating film. Related fabrication methods are also discussed.

FIG. 2

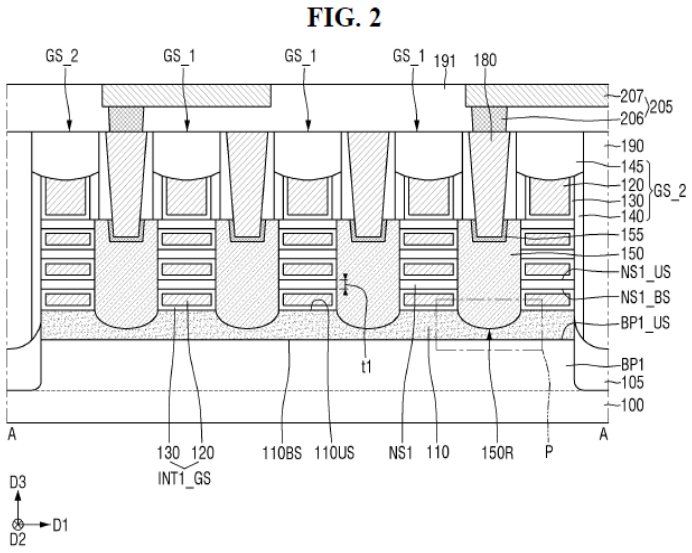

APPLICATIONS PUBLISHED UNDER SECTION 27 - cont'd

(12) SG PATENT APPLICATION

(13) A

(43) Publication Date: 31/01/2024

(21) Application No: 10202300552S

(71) Applicant(s): Samsung Electronics Co., Ltd.

(22) Date of filing: 01/03/2023

(72) Inventor(s): Kihwan Kim; Kyungho Kim; Kanghun Moon; Choeun Lee; Yonguk Jeon

(30) Priority Data: 10-2022-0068510 03/06/2022 REPUBLIC OF KOREA

(74) Agent(s): VIERING, JENTSCHURA & PARTNER LLP

(51) International Patent Classification:

(54) Title of Invention: SEMICONDUCTOR DEVICE AND METHOD OF MANUFACTURING THE SAME

(57) Abstract:

A semiconductor device, including a fin active region; a device isolation layer covering two sidewalls of the fin active region on the substrate; a gate structure; a nano-sheet structure including a plurality of nano-sheets; and source/drain regions disposed on the fin active region and adjacent to the gate structure, wherein each source/drain region of the source/drain regions includes a buffer layer, an inner impurity layer, and a central impurity layer which are sequentially stacked, wherein the buffer layer fills a first indentation between two vertically-adjacent nano-sheets and a second indentation between the top surface of the fin active region and a nano-sheet, and wherein the plurality of nano-sheets contact side surfaces of the inner impurity layer.

FIG. 2A

FIG. 2A

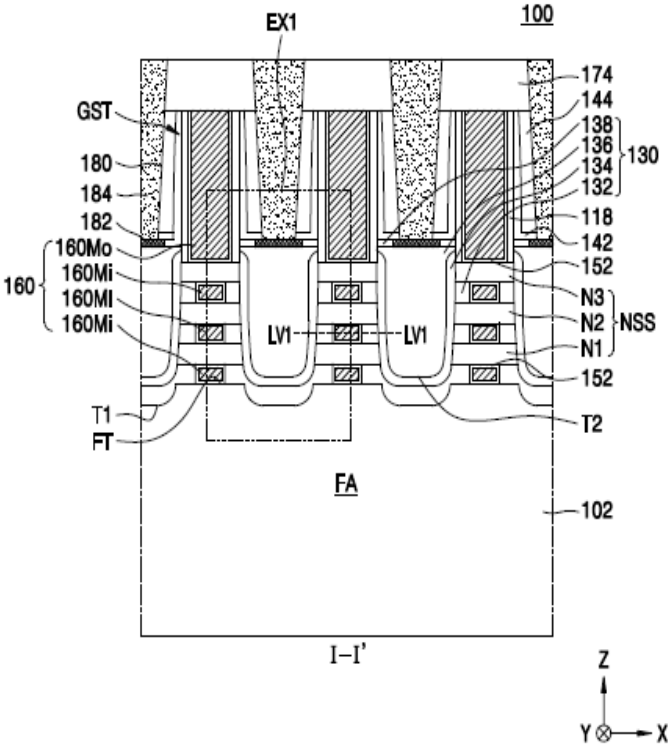

APPLICATIONS PUBLISHED UNDER SECTION 27 - cont'd

(12) SG PATENT APPLICATION

(13) A

(43) Publication Date: 31/01/2024

(21) Application No: 10202300683P

(71) Applicant(s): TANATECH VENTURES SDN BHD

(22) Date of filing: 13/03/2023

(72) Inventor(s): Patrick Martinent; Leon Chong Tit Liang

(30) Priority Data:

(74) Agent(s): PINTAS-IPHOUSE PTE. LTD.

(51) International Patent Classification: G06Q 10/06, G06F 17/40, G16Y 40/10, G16Y 10/05

(54) Title of Invention: A DATA LOGGING DEVICE AND SYSTEM THEREOF

(57) Abstract:

The present invention discloses a data logging device (200) for collecting data related to work activity comprising a mechanical actuator (201) which is triggerable by a worker in various ways, each corresponding to a different type of input data that is related to a specific work activity performed by the worker; a geographical position sensing component (202) for collecting location data of the data logging device (200); a processing module (203) in communication with the mechanical actuator (201) and the geographical position sensing component (202) for processing the input data and the location data; and a transceiver (204) operably connected to the processing module (203) for transmitting the processed data to a server (300) over a wireless network communication at a predetermined time interval. Additionally, the present invention discloses a data logging system (100) for monitoring work activity.

(The most illustrative figure: Fig. 1)

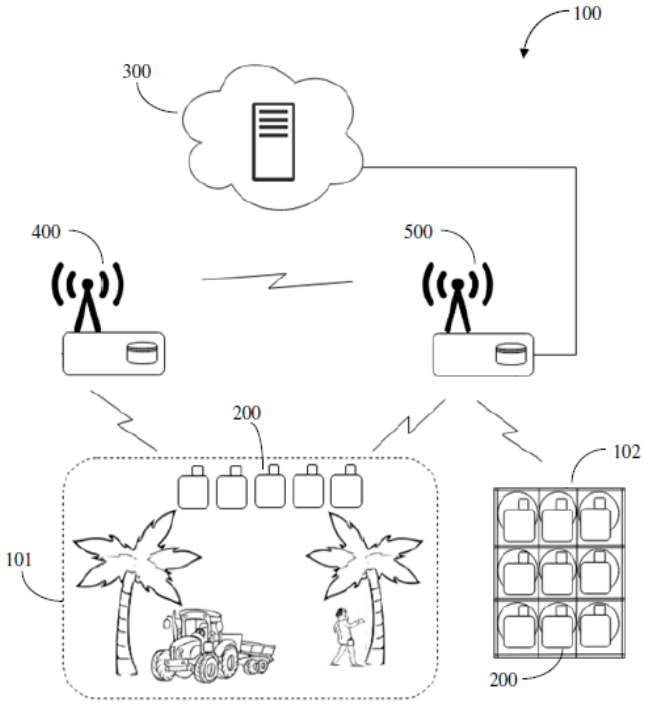

Figure 1

APPLICATIONS PUBLISHED UNDER SECTION 27 - cont'd

(12) SG PATENT APPLICATION

(13) A

(43) Publication Date: 31/01/2024

(21) Application No: 10202300985T

(22) Date of filing: 10/04/2023

(30) Priority Data: 10-2022-0076930 23/06/2022 REPUBLIC OF KOREA

(71) Applicant(s): Samsung Electronics Co., Ltd.

(72) Inventor(s): Donghoon Kwon; Beomjin Park; Boun Yoon

(74) Agent(s): VIERING, JENTSCHURA & PARTNER LLP

(51) International Patent Classification:

(54) Title of Invention: SEMICONDUCTOR DEVICES AND DATA STORAGE SYSTEMS INCLUDING THE SAME

(57) Abstract:

A semiconductor device includes a substrate, circuit devices on the substrate, lower interconnection lines electrically connected to the circuit devices, a peripheral region insulating layer covering the lower interconnection lines, a source structure on the peripheral region insulating layer, gate electrodes stacked and spaced apart from each other in a first direction on the source structure, channel structures penetrating through the gate electrodes and each including a channel layer, contact plugs penetrating through the gate electrodes and the source structure, extending in the first direction, and connected to a portion of the lower interconnection lines, and spacer layers between the contact plugs and the source structure and including a material different from a material of the insulating layer in the peripheral region, wherein each of the spacer layers has a first width on an upper surface and has a second width greater than the first width on a lower surface.

FIG. 2A

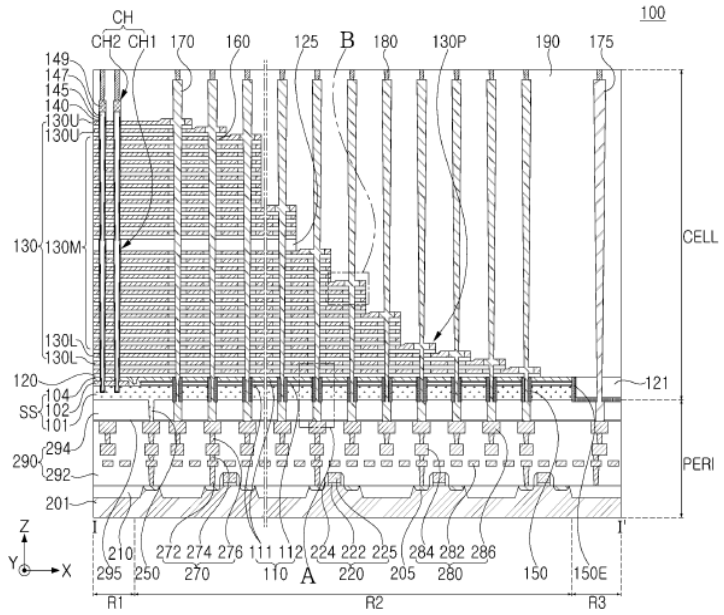

FIG. 2A

APPLICATIONS PUBLISHED UNDER SECTION 27 - cont'd

(12) SG PATENT APPLICATION

(13) A

(43) Publication Date: 31/01/2024

(21) Application No: 10202301014V

(71) Applicant(s): Grabtaxi Holdings Pte. Ltd.

(22) Date of filing: 01/07/2022

(72) Inventor(s): Zhengmin Xu; Andrei Georgescu; Padarn George Wilson; Nuo Xu; Xiaocheng Huang

(30) Priority Data:

(74) Agent(s): VIERING, JENTSCHURA & PARTNER LLP

(51) International Patent Classification:

(54) Title of Invention: METHOD, DEVICE AND SYSTEM FOR DETECTING DYNAMIC OCCLUSION

(57) Abstract:

Aspects concern a method for detecting dynamic occlusion on one or more images associated with a location of interest comprising the steps of: receiving a plurality of image data files associated with a location of interest, each image data file associated with at least a part of the location of interest; for each image determining the position and orientation of an image capturing device relative to the location of interest and generating camera pose information; generating a corresponding depth map; generating a corresponding semantic segmentation; grouping the image, camera pose information, depth map and semantic segmentation based on coordinates of the location of interest to form an image group; generating a voxel grid associated with the image group; and determining whether each voxel in the voxel grid is in a dynamically occluded state.

FIG. 1

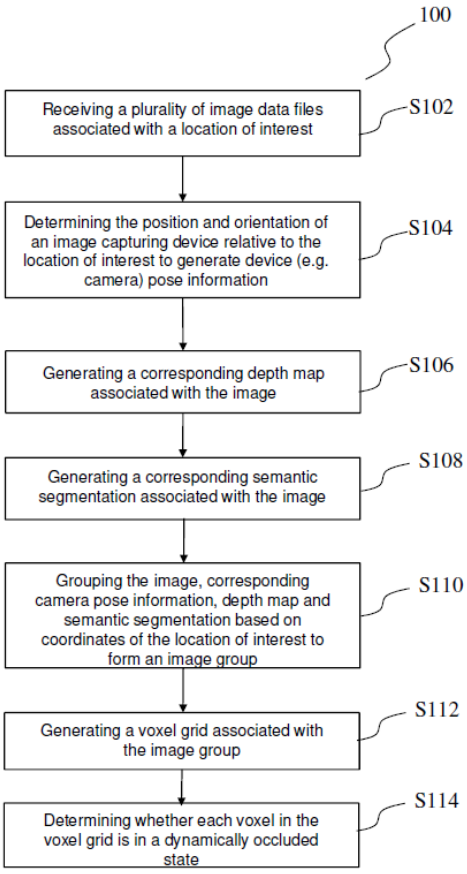

FIG. 1

APPLICATIONS PUBLISHED UNDER SECTION 27 - cont'd

(12) SG PATENT APPLICATION

(13) A

(43) Publication Date: 31/01/2024

(21) Application No: 10202301028S

(71) Applicant(s): HO, Chun-Hsuan

(22) Date of filing: 14/04/2023

(72) Inventor(s): HO, Chun-Hsuan

(30) Priority Data:
111121739
10/06/2022
TAIWAN

111141861
02/11/2022
TAIWAN

(74) Agent(s): W.P. LAI & COMPANY

(51) International Patent Classification:

(54) Title of Invention: METHOD FOR DETECTING IMMUNE EFFICACY AND PHARMACEUTICAL USE OF LYMPHOCYTES OR NATURAL KILLER CELLS

(57) Abstract:

In some embodiments of the present disclosure, a method for detecting immune efficacy is provided, including: generating quantity percentages of the plurality of T cell subgroups in the lymphocytes and quantity percentages of the nature killer cell subgroups in the lymphocytes to obtain actual percentages of the plurality of T cell subgroups and actual percentages of the nature killer cell subgroups; and judging whether immune efficacy is normal according to the actual percentages of the plurality of T cell subgroups and the actual percentages of the nature killer cell subgroups. Some embodiments of the present disclosure further provide use of lymphocytes for preparing a pharmaceutical composition for treating a cancer of an individual by regulating an actual number of a total number of T cells or the actual number of the total number of nature killer cells to a theoretical range.

Fig. 1

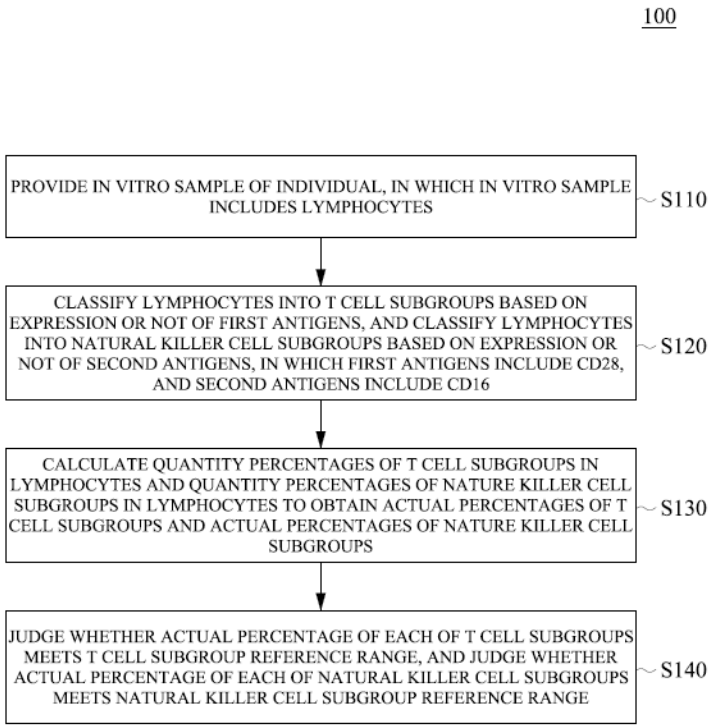

FIGURE 1

APPLICATIONS PUBLISHED UNDER SECTION 27 - cont'd

(12) SG PATENT APPLICATION

(13) A

(43) Publication Date: 31/01/2024

(21) Application No: 10202301053V

(71) Applicant(s): Grabtaxi Holdings Pte. Ltd.

(22) Date of filing: 14/04/2023

(72) Inventor(s): Yaohui LI; Chunda Ding; Xiaoning Wang

(30) Priority Data: PCT/CN2022/099517 17/06/2022 CHINA

(74) Agent(s): SPRUSON & FERGUSON (ASIA) PTE. LTD.

(51) International Patent Classification:

(54) Title of Invention: METHOD AND SYSTEM FOR ADAPTIVELY IDENTIFYING AN OPTIMAL ROUTE

(57) Abstract:

The present disclosure provides methods and systems for adaptively identifying an optimal route. In some examples, there is provided a method comprising: determining, by a processor, one or more pick up points based on historical data relating to a starting location, the starting location being one that is indicated in a request for a ride from the starting location to a destination location; determining, by the processor, one or more routes between each of the determined one or more pick up points and the destination location indicated in the ride request; and adaptively identifying, by the processor, an optimal route from the one or more routes based on at least one of a cheapest route, fastest route, shortest route and shortest walking distance.

(Fig. 5)

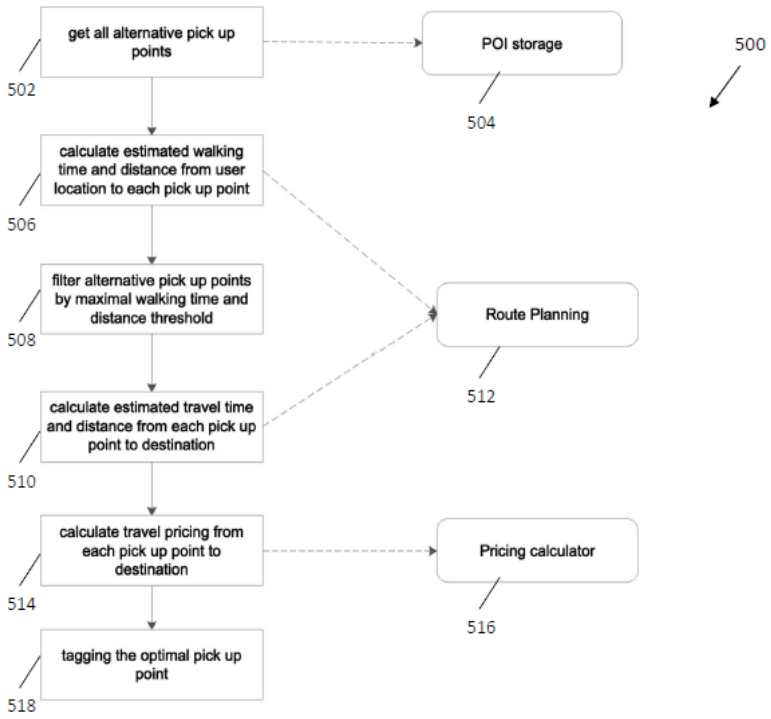

Figure 5

APPLICATIONS PUBLISHED UNDER SECTION 27 - cont'd

(12) SG PATENT APPLICATION

(13) A

(43) Publication Date: 31/01/2024

(21) Application No: 10202301113W

(71) Applicant(s): SK hynix Inc.

(22) Date of filing: 21/04/2023

(72) Inventor(s): Hye Lyoung LEE; Tae Un YOUN; Kwang Min LIM

(30) Priority Data: 10-2022-0078879 28/06/2022 REPUBLIC OF KOREA

(74) Agent(s): Donaldson & Burkinshaw LLP

(51) International Patent Classification:

(54) Title of Invention: MEMORY DEVICE AND METHOD OF OPERATING THE MEMORY DEVICE

(57) Abstract:

The present technology relates to a memory device and a method of operating the memory device. The memory device includes a memory block including a plurality of memory cells corresponding to a plurality of word line groups, a source line driver configured to apply an erase voltage to a source line of the memory block during an erase operation, a voltage generation circuit configured to apply an operation voltage increasing from a first operation voltage to a second operation voltage to the plurality of word line groups during the erase operation, and a control logic configured to control the source line driver and the voltage generation circuit to perform a suspend operation of stopping the erase operation.

FIG. 5

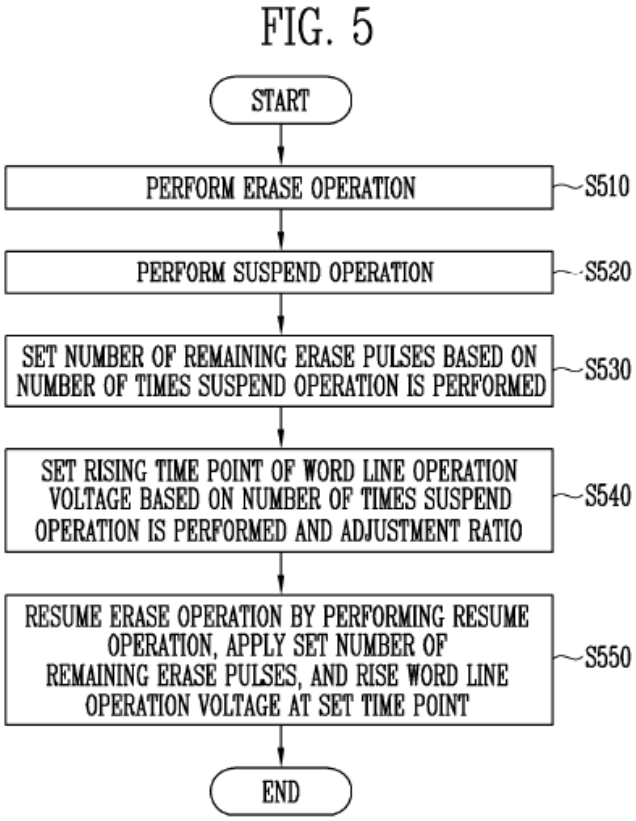

APPLICATIONS PUBLISHED UNDER SECTION 27 - cont'd

(12) SG PATENT APPLICATION

(13) A

(43) Publication Date: 31/01/2024

(21) Application No: 10202301236P

(71) Applicant(s): Samsung Electronics Co., Ltd.

(22) Date of filing: 03/05/2023

(72) Inventor(s): Seojin Jeong; Jungtaek Kim; Moonseung Yang; Sumin Yu; Edward Namkyu Cho; Seokhoon Kim; Pankwi Park

(30) Priority Data: 10-2022-0069701 08/06/2022 REPUBLIC OF KOREA

(74) Agent(s): VIERING, JENTSCHURA & PARTNER LLP

(51) International Patent Classification:

(54) Title of Invention: INTEGRATED CIRCUIT DEVICE

(57) Abstract:

An integrated circuit (IC) device includes a fin-type active region, a channel region on the fin-type active region, a gate line surrounding the channel region on the fin-type active region, a source/drain region that is adjacent to the gate line on the fin-type active region and has a sidewall facing the channel region, wherein the source/drain region includes a first buffer layer, a second buffer layer, and a main body layer, which are sequentially stacked in a direction away from the fin-type active region, each include a $Si_{1-x}Ge_x$ layer ($x \neq 0$) doped with a p-type dopant, and have different Ge concentrations, and the second buffer layer conformally covers a surface of the first buffer layer that faces the main body layer. A thickness ratio of the side buffer portion to the bottom buffer portion is in a range of about 0.9 to about 1.1.

FIG. 2A

FIG. 2A

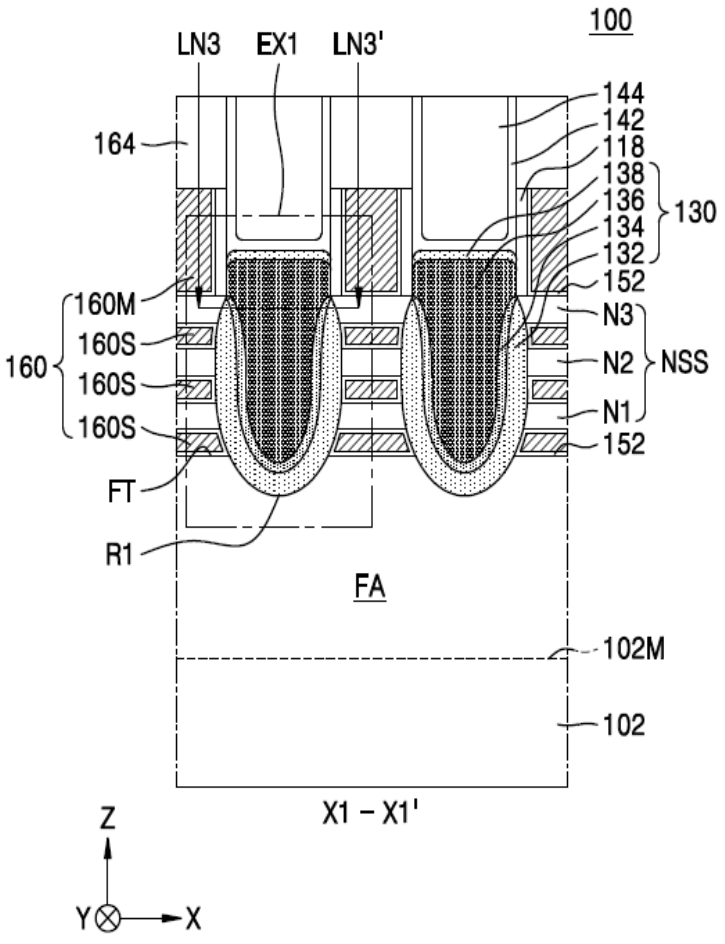

APPLICATIONS PUBLISHED UNDER SECTION 27 - cont'd

(12) SG PATENT APPLICATION

(13) A

(43) Publication Date: 31/01/2024

(21) Application No: 10202301277T

(71) Applicant(s): GENERAL ELECTRIC COMPANY

(22) Date of filing: 09/05/2023

(72) Inventor(s): BORJA, Juan P.; DUNN, Daniel Gene; WEAVER, Jared Hogg; SETLUR, Anant Achyut

(30) Priority Data: 17/851,269 28/06/2022 UNITED STATES OF AMERICA

(74) Agent(s): MIRANDAH ASIA (SINGAPORE) PTE LTD

(51) International Patent Classification:

(54) Title of Invention: COMPOSITE COMPONENTS AND METHODS FOR PREVENTING FLOW FROM INFILTRATED COMPONENT DURING RE-INFILTRATION

(57) Abstract:

A method for modifying a composite component may include positioning a barrier segment between an infiltrated segment of the composite component and a green segment to form an assembly; and initiating an infiltration process. The barrier segment may have a barrier segment permeability that is lower than a permeability of the infiltrated segment, a permeability of the green segment, or both. A composite component may include an infiltrated segment infiltrated with a molten material during a prior infiltration process; a green segment that is uninfiltrated; and a barrier segment having a microstructure different from the infiltrated segment, the green segment, or both. The microstructure of the barrier segment may be configured to slow a flow of material between the infiltrated segment and the green segment during a subsequent infiltration process.

[FIG. 2]

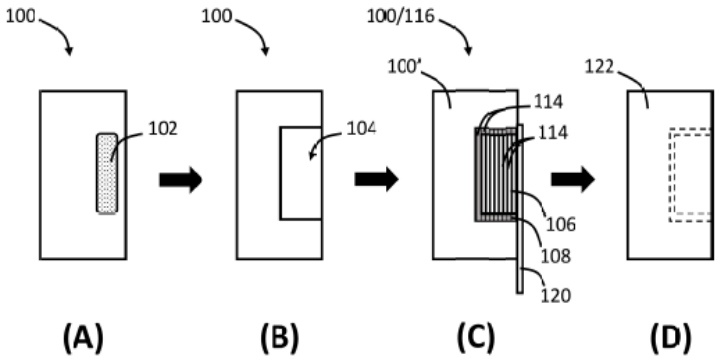

FIG. 2

APPLICATIONS PUBLISHED UNDER SECTION 27 - cont'd

(12) SG PATENT APPLICATION

(13) A

(43) Publication Date: 31/01/2024

(21) Application No: 10202301331S

(71) Applicant(s): ASMPT Singapore Pte. Ltd.

(22) Date of filing: 12/05/2023

(72) Inventor(s):
QI Jun;
MENG Hao;
CHEN Zheng;
DU Yi Dong;
HE Li Dong

(30) Priority Data:
202210642604.0
08/06/2022
CHINA

(74) Agent(s): DREW & NAPIER LLC

(51) International Patent Classification:

(54) Title of Invention: DIELECTRIC BARRIER DISCHARGE PLASMA GENERATOR

(57) Abstract:

A dielectric barrier discharge plasma generator includes a ground electrode and a high voltage electrode which are configured to form a circuit to receive a power input for plasma generation, a dielectric barrier having a first surface attached to the high voltage electrode, and a second surface facing the ground electrode, and discharge gap being formed between the second surface of the dielectric barrier and the ground electrode for plasma generation, and a resiliently deformable mechanism operative to bias the high voltage electrode against the first surface of the dielectric barrier.

[FIG. 1]

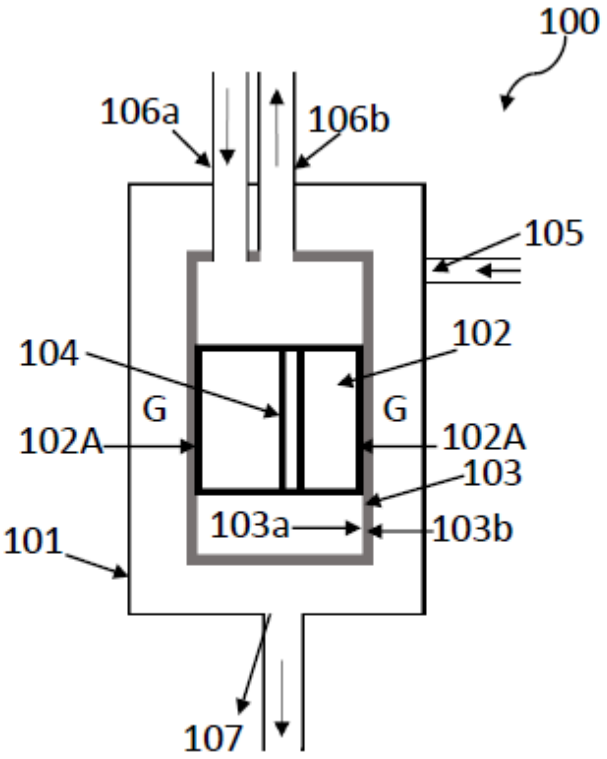

FIG. 1

APPLICATIONS PUBLISHED UNDER SECTION 27 - cont'd

(12) SG PATENT APPLICATION

(13) A

(43) Publication Date: 31/01/2024

(21) Application No: 10202301342X

(71) Applicant(s): DISCO CORPORATION

(22) Date of filing: 15/05/2023

(72) Inventor(s): Aki TAKAHASHI; Takuya MIHARA

(30) Priority Data: 2022-094055 10/06/2022 JAPAN

(74) Agent(s): MIRANDAH ASIA (SINGAPORE) PTE LTD

(51) International Patent Classification:

(54) Title of Invention: WORKPIECE GRINDING METHOD

(57) Abstract:

Provided is a workpiece grinding method that is applied when a circular plate-shaped workpiece which has a first surface and a second surface on an opposite side of the first surface is to be ground. The workpiece grinding method includes a first grinding step of grinding the workpiece to form a circular plate-shaped first thin plate portion and an annular first thick plate portion that surrounds the first thin plate portion and that has an inner side surface at least part of which is inclined with respect to the second surface, and a second grinding step of grinding the workpiece to form a circular plate-shaped second thin plate portion that is larger in diameter but thinner than the first thin plate portion and an annular second thick plate portion that surrounds the second thin plate portion.

[FIG. 6]

FIG.6

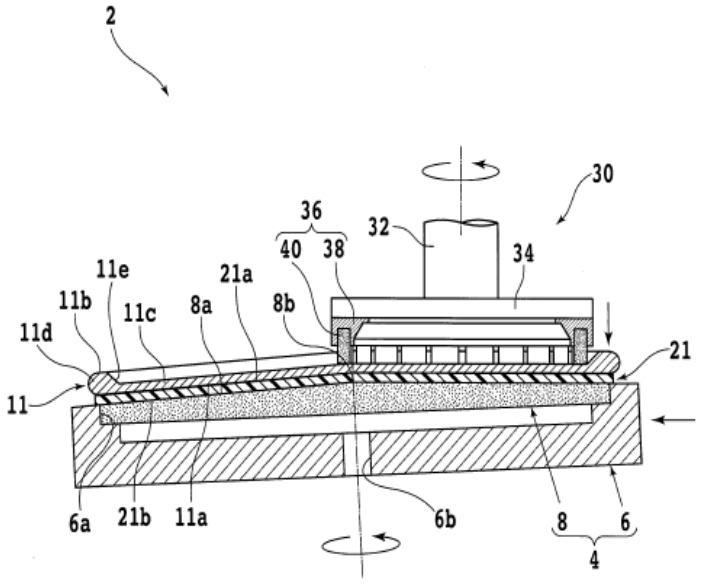

APPLICATIONS PUBLISHED UNDER SECTION 27 - cont'd

(12) SG PATENT APPLICATION (13) A (43) Publication Date: 31/01/2024 (21) Application No: 10202301390U (71) Applicant(s): Agency for Science, Technology and Research (22) Date of filing: 18/05/2023 (72) Inventor(s): Zhang Yugen; Riduan Siti Nurhanna Bte (30) Priority Data: 10202250146M 13/06/2022 SINGAPORE (74) Agent(s): CHINA SINDA INTELLECTUAL PROPERTY PTE. LTD. (51) International Patent Classification:	(54) Title of Invention: ZEOLITIC IMIDAZOLATE FRAMEWORK COATED ZINC COMPOSITE AS ANTIMICROBIAL MATERIAL (57) Abstract: The invention relates to an antimicrobial composite comprising a zinc core with a zeolitic imidazolate framework (ZIF) shell and a method of producing the same. (No suitable figure)

APPLICATIONS PUBLISHED UNDER SECTION 27 - cont'd

(12) SG PATENT APPLICATION

(13) A

(43) Publication Date: 31/01/2024

(21) Application No: 10202301397Q

(71) Applicant(s): Visa International Service Association

(22) Date of filing: 18/05/2023

(72) Inventor(s): Sam HAMILTON; Akon Samir DEY; Vaibhav Prakash GAJRE; Veerabhadraiah LINGADHALLI MATADHA

(30) Priority Data: 17/851,233 28/06/2022 UNITED STATES OF AMERICA

(74) Agent(s): Donaldson & Burkinshaw LLP

(51) International Patent Classification:

(54) Title of Invention: SYSTEM AND METHOD FOR IMPLEMENTING ENHANCED PAYMENT ON DELIVERY

(57) Abstract:

In some embodiments, a method includes receiving, from a user of a user device, a request for an authorization-by-proxy payment on delivery (POD); requesting, at the user device, the user identify an authorized proxy for the authorization-by-proxy POD; generating an authorization-by-proxy code based upon buyer-controlled payment control parameters; and using the buyer-controlled payment parameters to control processing of a payment for the authorization-by-proxy POD. In some embodiments, the method further includes pre-authorizing, at shipment time of merchandise associated with the authorization-by-proxy POD, a hold on a monetary amount associated with an order of the merchandise associated with the authorization-by-proxy POD.

FIG. 2

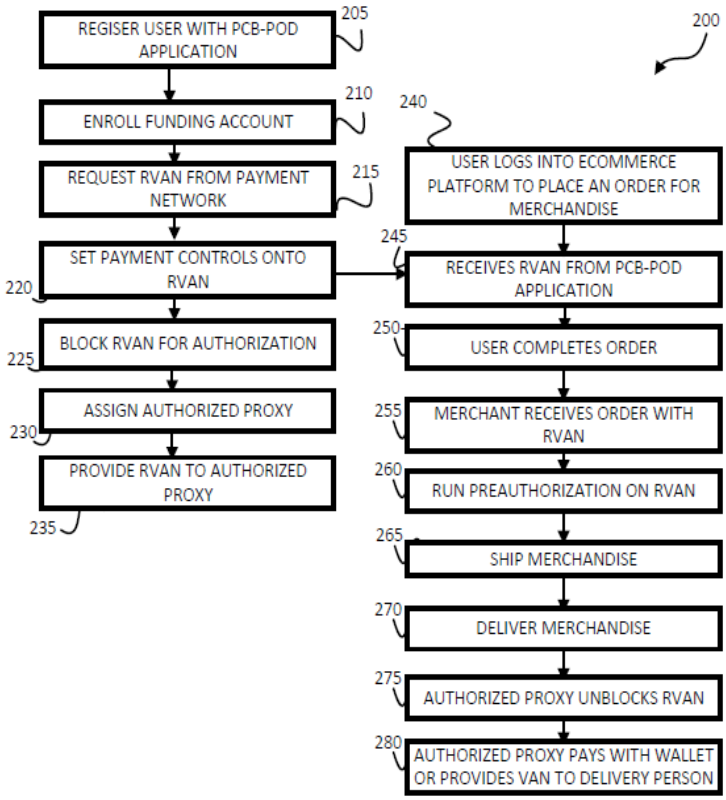

FIG. 2

APPLICATIONS PUBLISHED UNDER SECTION 27 - cont'd

(12) SG PATENT APPLICATION

(13) A

(43) Publication Date: 31/01/2024

(21) Application No: 10202301433U

(71) Applicant(s): The Boeing Company

(22) Date of filing: 23/05/2023

(72) Inventor(s): WANG, Changzhou; PUIGH, Darren; MACER, Darren Brian; YUAN, JUN; MAZAREK, Mark; QUACH, Lesley

(30) Priority Data: 17,806,025 08/06/2022 UNITED STATES OF AMERICA

(74) Agent(s): SPRUSON & FERGUSON (ASIA) PTE. LTD.

(51) International Patent Classification:

(54) Title of Invention: Component Maintenance Prediction System With Behavior Modeling

(57) Abstract:

A method, apparatus, system for managing a maintenance for a component in a vehicle. Sensor data is received for the vehicle. Target parameters are predicted using behavior machine learning models trained using first training data to predict the target parameters for a normal behavior of the component operating in a tolerance, wherein the target parameters characterize behavior of the component. Prediction metrics are determined from predicted values for the target parameters predicted by behavior machine learning models and actual values for the target parameters. Whether the component will fall out of the tolerance after a time period is predicted using the prediction metrics and a maintenance machine learning model trained using second training data to predict whether the maintenance is needed for the component, wherein the second training data comprises historical prediction metrics determined for the target parameters.

Fig. 7

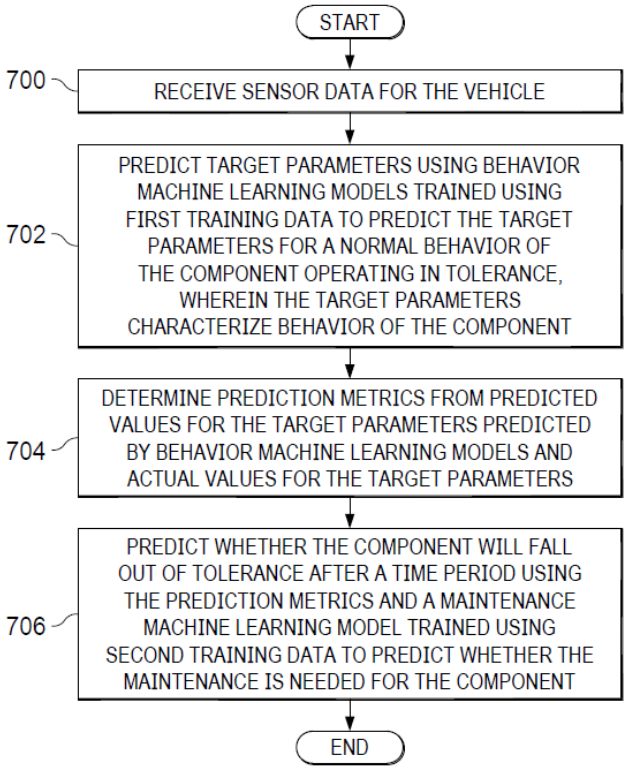

FIG. 7

APPLICATIONS PUBLISHED UNDER SECTION 27 - cont'd

(12) SG PATENT APPLICATION

(13) A

(43) Publication Date: 31/01/2024

(21) Application No: 10202301436R

(71) Applicant(s): SAMSUNG ELECTRONICS CO., LTD.

(22) Date of filing: 23/05/2023

(72) Inventor(s): Taeyong Kwon; Yoonjoong Kim; Seungmin Kim; Dogeon Lee

(30) Priority Data: 10-2022-0081410 01/07/2022 REPUBLIC OF KOREA

(74) Agent(s): VIERING, JENTSCHURA & PARTNER LLP

(51) International Patent Classification:

(54) Title of Invention: SEMICONDUCTOR DEVICE

(57) Abstract:

A semiconductor device may include a plurality of first channel structures on a substrate, a plurality of second channel structures on the substrate, a first impurity region structure between the first channel structures, a second impurity region structure between second channel structures, a third impurity region structure between the first and second channel structures, and a plurality of gate structures disposed between the first to third impurity region structures, respectively. Each of the first channel structure may have a first width, and each of the second channel structure may have a second width less than the first width. The first impurity region structure may have a first volume, and the second impurity region structure may have a second volume smaller than the first volume. The third impurity region structure may have a third volume smaller than the first volume and greater than the second volume.

FIG. 1

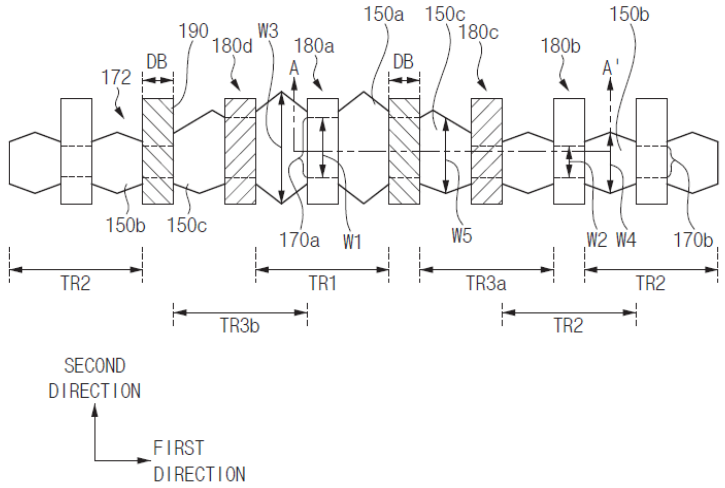

FIGURE 1

APPLICATIONS PUBLISHED UNDER SECTION 27 - cont'd

(12) SG PATENT APPLICATION

(13) A

(43) Publication Date: 31/01/2024

(21) Application No: 10202301443T

(71) Applicant(s): THE BOEING COMPANY; TOHOKU UNIVERSITY

(22) Date of filing: 23/05/2023

(72) Inventor(s):
DE SILVA, Kandaudage Channa Ruwan;
SANDERS, Daniel Gordon;
SHIMABUKURO, John K.;
SOYAMA, Hitoshi

(30) Priority Data:
17/856934
01/07/2022
UNITED STATES OF AMERICA

(74) Agent(s): SPRUSON & FERGUSON (ASIA) PTE. LTD.

(51) International Patent Classification:

(54) Title of Invention: Damage Tolerant Cavitation Nozzle

(57) Abstract:

A cavitation nozzle is disclosed, including a plate, a hollow body, and a cap removably engaged with the hollow body and holding the plate against a distal end of the hollow body. The plate may have a central aperture and a distal surface, wherein the distal surface is bisected by a groove and the hollow body is configured to deliver high pressure fluid through the central aperture. The delivered high pressure fluid may be discharged as a cavitating jet.

[Fig. 1]

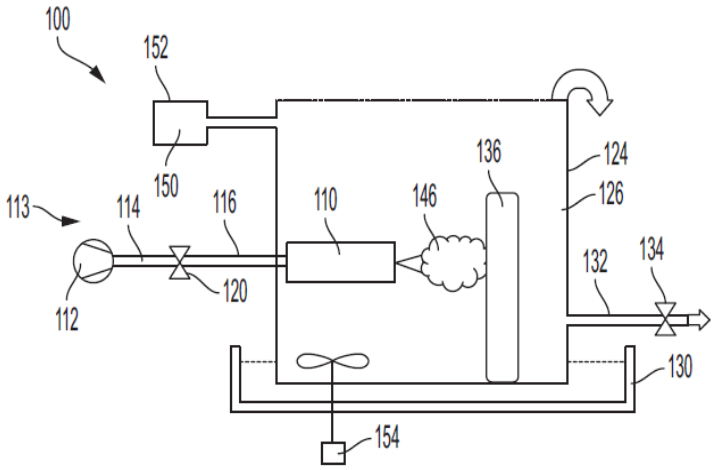

FIG. 1

APPLICATIONS PUBLISHED UNDER SECTION 27 - cont'd

(12) SG PATENT APPLICATION

(13) A

(43) Publication Date: 31/01/2024

(21) Application No: 10202301500U

(71) Applicant(s): ASMPT SMT Singapore Pte. Ltd.

(22) Date of filing: 26/05/2023

(72) Inventor(s): Keith Michael HANSFORD; Simon Stuart PAPE

(30) Priority Data: 2209248.0 23/06/2022 UNITED KINGDOM

(74) Agent(s): DREW & NAPIER LLC

(51) International Patent Classification:

(54) Title of Invention: ALIGNMENT OF SINGULATED SUBSTRATES

(57) Abstract:

Tooling for supporting workpieces during a printing operation, comprises a support tower comprising a base and a head, the head being positioned vertically above the base in use, the head being relatively moveable with respect to the base in a horizontal plane in use, the head having first and second support surfaces located at an upper end thereof, each of the first and second support surfaces being adapted to support a respective workpiece thereon, wherein the first support surface is relatively moveable with respect to the second support surface in a vertical direction in use between a printing configuration in which the first and second support surfaces are substantially coplanar in the horizontal plane, and a pre-printing configuration in which the first and second support surfaces are spaced in the vertical direction.

FIG. 13

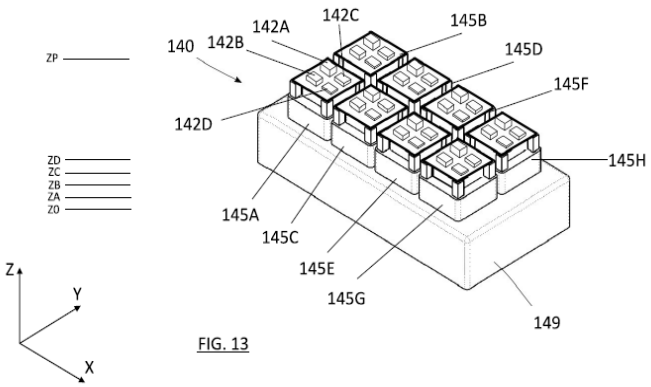

FIG. 13

APPLICATIONS PUBLISHED UNDER SECTION 27 - cont'd

(12) SG PATENT APPLICATION

(13) A

(43) Publication Date: 31/01/2024

(21) Application No: 10202301506P

(71) Applicant(s): DISCO CORPORATION

(22) Date of filing: 29/05/2023

(72) Inventor(s): Kunishige SUZUKI

(30) Priority Data: 2022-091454 06/06/2022 JAPAN

(74) Agent(s): MIRANDAH ASIA (SINGAPORE) PTE LTD

(51) International Patent Classification:

(54) Title of Invention: TAPE AFFIXING APPARATUS

(57) Abstract:

A tape affixing apparatus includes a holding unit that holds a wafer and a ring frame, a peeling plate that peels off a dicing tape from a sheet by bending a tape set at an acute angle, an affixing roller configured to affix the dicing tape to the wafer and the ring frame by pressing the dicing tape peeled off from the sheet by the peeling plate against the wafer and the ring frame, an air nozzle that makes a distal end of the dicing tape peeled off from the sheet conform to an outside surface of the affixing roller, and an end detecting unit that detects the distal end of the dicing tape made to conform to the outside surface of the affixing roller.

[FIG. 2]

FIG.2

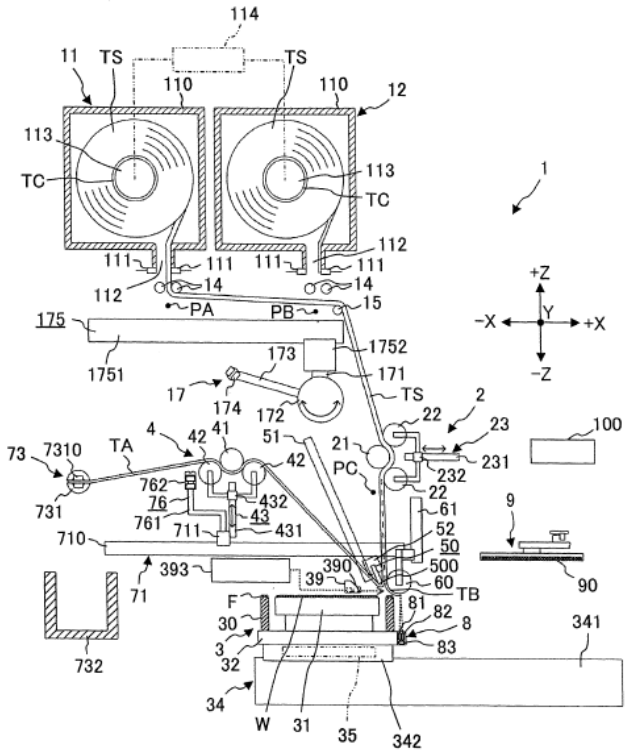

APPLICATIONS PUBLISHED UNDER SECTION 27 - cont'd

(12) SG PATENT APPLICATION

(13) A

(43) Publication Date: 31/01/2024

(21) Application No: 10202301507Q

(71) Applicant(s): DISCO CORPORATION

(22) Date of filing: 29/05/2023

(72) Inventor(s): Koichi SHIGEMATSU; Shuichiro TSUKIJI

(30) Priority Data: 2022-095216 13/06/2022 JAPAN

(74) Agent(s): MIRANDAH ASIA (SINGAPORE) PTE LTD

(51) International Patent Classification:

(54) Title of Invention: PROCESSING APPARATUS

(57) Abstract:

A processing apparatus includes a holding unit for holding a workpiece thereon, a processing unit for processing the workpiece held on the holding unit, a moving mechanism for moving the holding unit and the processing unit relatively to each other, a processed state measuring unit for measuring a processed state of the workpiece, and a controller for controlling the processing unit, the moving mechanism, and the processed state measuring unit. The controller acquires processed state information of the workpiece from the processed state measuring unit, acquires vibration information regarding vibrations that are being produced while the processed state information is acquired, links the processed state information and the vibration information that have been acquired with each other, and stores the processed state information and the vibration information that have been linked with each other.

[FIG. 1]

FIG. 1

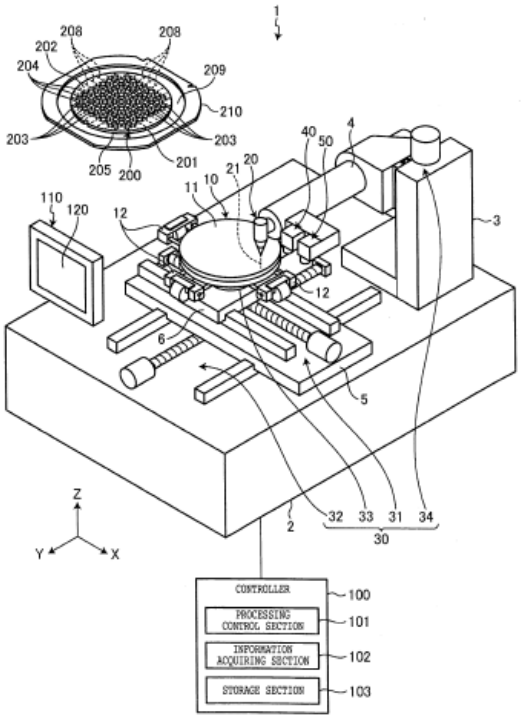

APPLICATIONS PUBLISHED UNDER SECTION 27 - cont'd

(12) SG PATENT APPLICATION

(13) A

(43) Publication Date: 31/01/2024

(21) Application No: 10202301520T

(71) Applicant(s): Alipay (Hangzhou) Information Technology Co., Ltd.

(22) Date of filing: 30/05/2023

(72) Inventor(s): DONG, Xingning; CHENG, Yuan

(30) Priority Data: 202210698004.6 20/6/2022 CHINA

(74) Agent(s): SPRUSON & FERGUSON (ASIA) PTE. LTD.

(51) International Patent Classification:

(54) Title of Invention: Method And Apparatus For Training Relationship Recognition Model And Method And Apparatus For Analyzing Image

(57) Abstract:

Implementations of the present specification provide a method for training a relationship recognition model and a method and an apparatus for analyzing an image by using the model. The training method includes: dividing a total relationship class set into K groups, and correspondingly setting K classifiers, where the kth classification space corresponding to any kth classifier includes classification space corresponding to a previous classifier and relationship classes in a kth group; sampling a full set of image samples for the K classifiers to obtain K sample subsets respectively, and inputting the K sample subsets to corresponding classifiers to obtain relationship class prediction results between objects in images; and determining a first loss based on classification losses of the K classifiers, and determining a second loss based on a similarity between relationship class prediction results of different classifiers in the K classifiers for a same pair of objects, so that a relationship recognition model is updated based on the first loss and the second loss.

Figure 6

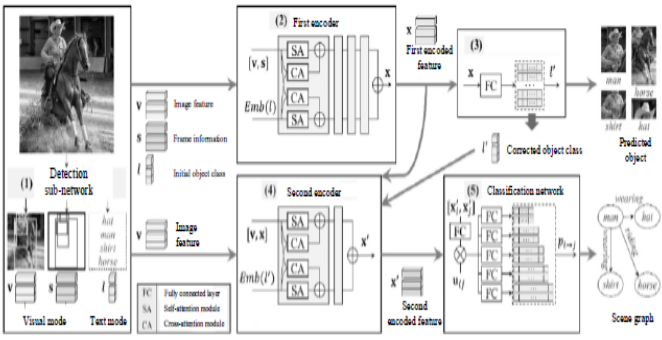

FIG. 6

APPLICATIONS PUBLISHED UNDER SECTION 27 - cont'd

(12) SG PATENT APPLICATION

(13) A

(43) Publication Date: 31/01/2024

(21) Application No: 10202301521R

(71) Applicant(s): Alipay (Hangzhou) Information Technology Co., Ltd.

(22) Date of filing: 30/05/2023

(72) Inventor(s): ZHANG, Wenpeng; GU, Lihong; ZHANG, Guannan; GU, Jinjie; ZHONG, Wenliang

(30) Priority Data: 202210694769.2 20/06/2022 CHINA

(74) Agent(s): SPRUSON & FERGUSON (ASIA) PTE. LTD.

(51) International Patent Classification:

(54) Title of Invention: Methods And Apparatuses For Training Prediction Model

(57) Abstract:

Embodiments of this specification provide methods and apparatuses for training a prediction model. The prediction model includes a first branch and a second branch. According to the methods, a target sample is first obtained, where the target sample includes a sample feature, a first label, and a second label; the first label indicates whether a user clicks on a target object; and the second label indicates whether the user implements a target behavior related to the target object. Processing is performed on the sample feature by using the prediction model so that the first branch outputs a first probability that the user clicks on the target object, and the second branch outputs a second probability that the user implements the target behavior. A first loss is determined based on a first label value and the first probability. In addition, when a predetermined condition is satisfied, a second loss is determined based on a second label value and the second probability, and a predicted loss of the target sample is determined based on the first loss and the second loss, where the predetermined condition includes the following: the first label value indicates that the user clicks on the target object. The prediction model can be trained based on the predicted loss above.

FIG. 3

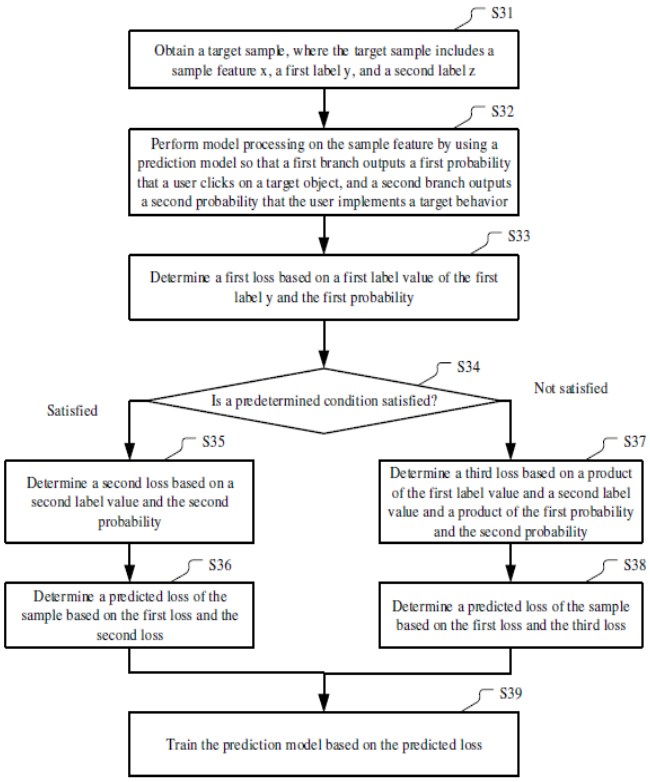

FIG. 3

APPLICATIONS PUBLISHED UNDER SECTION 27 - cont'd

(12) SG PATENT APPLICATION

(13) A

(43) Publication Date: 31/01/2024

(21) Application No: 10202301525W

(71) Applicant(s): General Electric Company;Oliver Crispin Robotics Limited

(22) Date of filing: 30/05/2023

(72) Inventor(s): TODD WILLIAM DANKO; TREVOR OWEN HAWKE

(30) Priority Data:
17/832,248
03/06/2022
US

(74) Agent(s): MIRANDAH ASIA (SINGAPORE) PTE LTD

(51) International Patent Classification:

(54) Title of Invention: SYSTEMS AND METHODS FOR ALIGNING AND LOCALIZING A TOOL

(57) Abstract:

A maintenance tool and alignment system are provided having a first optical device and a second optical device. The tool includes the at least two optical devices such that they do not occupy the same space or interfere with the tool's function. In some embodiments, the first and second optical devices define or project a first viewing plane and a second viewing plane. The first viewing plane and second viewing plane are transverse to one another and intersect within a field of view of the first optical device creating an intersection. The intersection of the first and second viewing planes allows for the tool, via a processor or a control device, to alignment the tool within a workspace without a dependence on an estimation of a distance of the tool relative to the workspace.

[Figure 1]

FIG. 1

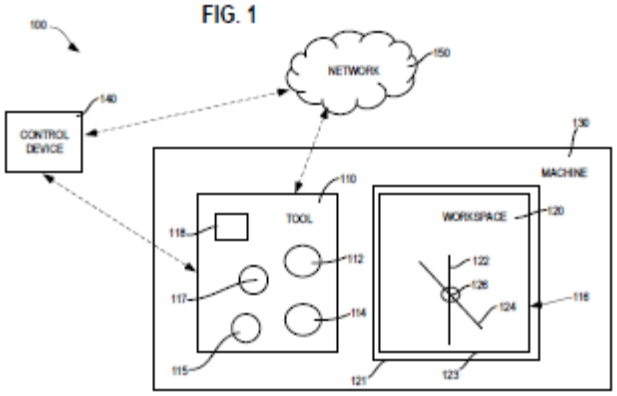

APPLICATIONS PUBLISHED UNDER SECTION 27 - cont'd

(12) SG PATENT APPLICATION

(13) A

(43) Publication Date: 31/01/2024

(21) Application No: 10202301527S

(71) Applicant(s): Alipay (Hangzhou) Information Technology Co., Ltd.

(22) Date of filing: 30/05/2023

(72) Inventor(s): LEI Xinxin; CHEN Jinfu; WAN Xiaofei

(30) Priority Data:
202210717214.5
23/06/2022
CN

(74) Agent(s): SPRUSON & FERGUSON (ASIA) PTE. LTD.

(51) International Patent Classification:

(54) Title of Invention: METHODS AND SYSTEMS FOR RECOGNIZING DISGUISED DEVICE

(57) Abstract:

This disclosure relates to a method and a system for recognizing a disguised device. A client of an application is installed on the device for interacting with the application, and the method includes: receiving environment information associated with the device and a device ID associated with the device in response to an interaction with the application from the device; determining whether the device ID exists in a pre-stored association table of a unique environment identifier and a device ID; and if the device ID does not exist in the association table, calculating a unique environment identifier associated with the device based on the environment information; searching the association table for a device ID associated with the unique environment identifier by using the unique environment identifier; and determining, based on a quantity of different identified device IDs associated with the unique environment identifier, whether the device is disguised.

FIG. 1

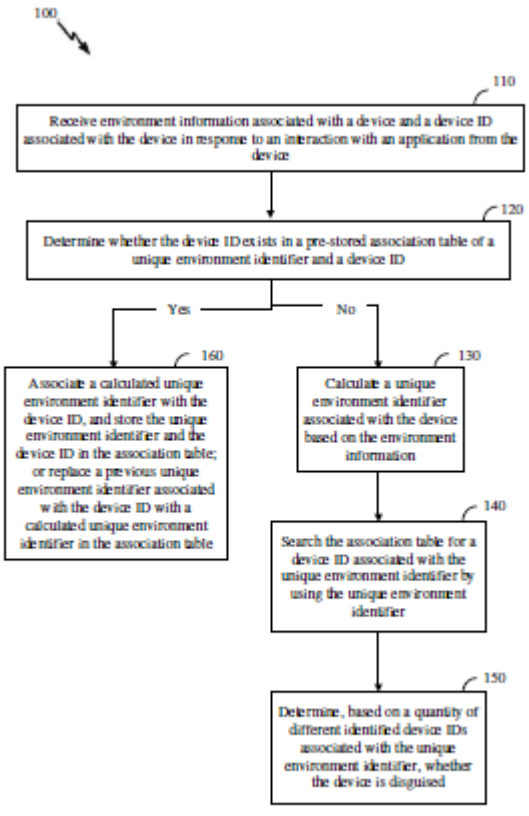

FIG. 1

APPLICATIONS PUBLISHED UNDER SECTION 27 - cont'd

(12) SG PATENT APPLICATION

(13) A

(43) Publication Date: 31/01/2024

(21) Application No: 10202301537T

(71) Applicant(s): EXFO Oy

(22) Date of filing: 31/05/2023

(72) Inventor(s): Jukka KEMPPAINEN

(30) Priority Data:
63/354,777
23/06/2022
US

63/416,132
14/10/2022
US

(74) Agent(s): DAVIES COLLISON CAVE ASIA PTE. LTD.

(51) International Patent Classification:

(54) Title of Invention: METHOD AND APPARATUS FOR IDENTITY COLLECTION

(57) Abstract:

Method and arrangement for collecting subscriber identity is presented. A communication intelligence cell is formed (500) for carrying out uplink and downlink communication with cellular mobile devices. The cell is connected (502) to the identity query interface of the cellular network operator. An encrypted subscriber identity of the cellular mobile device is received (508) from a mobile device. A radio connection to the mobile device is closed (510). A second registration request with a temporary identity of the cellular mobile device is received (514) from the mobile device. An identity query with the temporary identity of the mobile device is transmitted (516) to the identity query interface and permanent identity of the mobile device is received (518) from the query interface.

[Fig. 5]

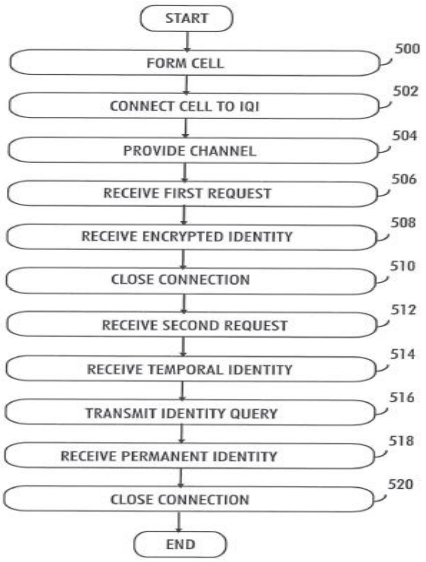

FIG. 5

APPLICATIONS PUBLISHED UNDER SECTION 27 - cont'd

(12) SG PATENT APPLICATION

(13) A

(43) Publication Date: 31/01/2024

(21) Application No: 10202301542Q

(71) Applicant(s): Alipay (Hangzhou) Information Technology Co., Ltd.

(22) Date of filing: 31/05/2023

(72) Inventor(s): Jia Yan; Jun Zhou; Quan Yu; Zhigang Hua; Yanming Fang; Jing Wang; Min Wang; Wenbo Shen

(30) Priority Data:
202210674620.8
15/06/2022
CN

(74) Agent(s): SPRUSON & FERGUSON (ASIA) PTE. LTD.

(51) International Patent Classification:

(54) Title of Invention: Resource Allocation Methods And Apparatuses

(57) Abstract:

Embodiments of the present specification provide a network resource allocation method and apparatus. According to the method, resource limit information and time period information of a network resource corresponding to target future duration are obtained, where the time period information includes a first ranking of a plurality of time period types included in the target future duration based on resource return rates. In addition, group estimation information is further obtained, including an estimated resource return in a case in which each user group in a plurality of user groups obtains a network resource of each candidate share for each time period type. Therefore, under a plurality of constraint conditions, a resource share allocated to each user group in a time period of each time period type is determined based on the group estimation information with a goal of maximizing a sum of estimated resource returns in the target future duration, where the plurality of constraint conditions include: a total allocated resource share satisfies the resource limit information, and resource allocation for each time period type satisfies the first ranking.

FIG. 2

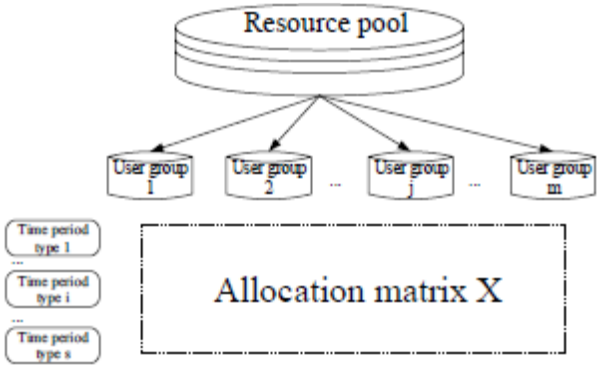

FIG. 2

APPLICATIONS PUBLISHED UNDER SECTION 27 - cont'd

(12) SG PATENT APPLICATION

(13) A

(43) Publication Date: 31/01/2024

(21) Application No: 10202301548T

(71) Applicant(s): ALIPAY (HANGZHOU) INFORMATION TECHNOLOGY CO., LTD.

(22) Date of filing: 31/05/2023

(72) Inventor(s): WU, Chao; WAN, Xiaofei; XIN, Zhi

(30) Priority Data:
202210717493.5
17/06/2022
CN

(74) Agent(s): SPRUSON & FERGUSON (ASIA) PTE. LTD.

(51) International Patent Classification:

(54) Title of Invention: DATA PROCESSING METHODS, APPARATUSES, AND DEVICES

(57) Abstract:

Some embodiments of this specification provide data processing methods, apparatuses, and devices. The method includes: acquiring a running state of a target application in a trusted execution environment; if it is determined that the target application runs abnormally in the trusted execution environment based on the running state, acquiring a first key and a device key, and debugging information, generated in the trusted execution environment, corresponding to the target application in the trusted execution environment, where the device key is a key generated by a server based on a client device; encrypting the debugging information based on the first key in the trusted execution environment to obtain encrypted debugging information, and encrypting the first key based on the device key to obtain an encrypted first key; and sending the encrypted debugging information and the encrypted first key to the server.

[FIG. 1A]

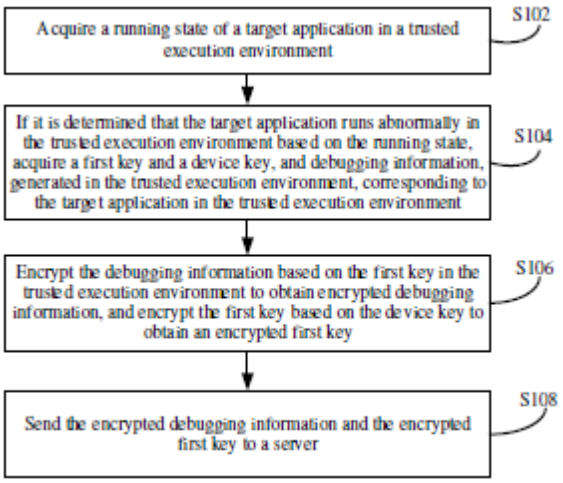

FIG. 1A

APPLICATIONS PUBLISHED UNDER SECTION 27 - cont'd

(12) SG PATENT APPLICATION

(13) A

(43) Publication Date: 31/01/2024

(21) Application No: 10202301550V

(71) Applicant(s): Panasonic Intellectual Property Management Co., Ltd.

(22) Date of filing: 01/06/2023

(72) Inventor(s): Emi TAKEMOTO; Yoko MATSUBAYASHI; Ryo OKAMOTO

(30) Priority Data:
2022-091890
06/06/2022
JP

(74) Agent(s): Amica Law LLC

(51) International Patent Classification:

(54) Title of Invention: LIGHTING SYSTEM

(57) Abstract:

An object of the present disclosure is to provide a lighting system configured to easily provide a further complicated rendering. A lighting system (1) includes a plurality of light sources and a controller (11). The plurality of light sources at least include a first light source (21) and a second light source (22). The first light source (21) is configured to output first illumination light. The second light source (22) is configured to output second illumination light. The controller (11) is configured to periodically change each of an optical property of the first illumination light and an optical property of the second illumination light. Each of the optical property of the first illumination light and the optical property of the second illumination light is a property relating to at least one of a luminous flux, a hue, or saturation.

(Fig. 1)

FIG. 1

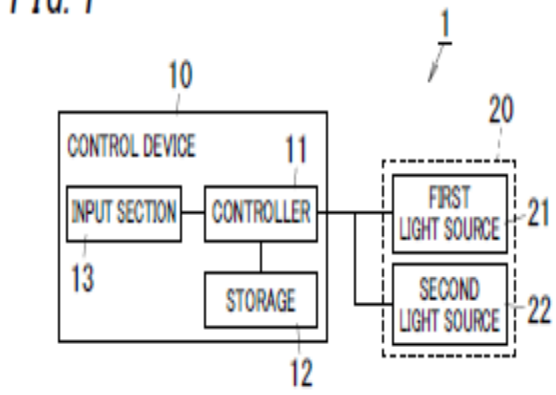

APPLICATIONS PUBLISHED UNDER SECTION 27 - cont'd

(12) SG PATENT APPLICATION

(13) A

(43) Publication Date: 31/01/2024

(21) Application No: 10202301565P

(71) Applicant(s): KABUSHIKI KAISHA TOP

(22) Date of filing: 05/06/2023

(72) Inventor(s): Issei KAWACHI

(30) Priority Data:
2022-093188
08/06/2022
JP

(74) Agent(s): hslegal LLP

(51) International Patent Classification:

(54) Title of Invention: INFUSION PUMP

(57) Abstract:

The present invention has an object to provide an infusion pump that is smaller than that in the related art. An infusion pump according to the invention includes a main body 10, and a fixing part 30 for fixing the main body 10 to a support member, in which the main body 10 has a mounting portion 21 which is formed on a first side surface 11 provided to face the support member, and on which the fixing part 30 is mounted, and the mounting portion 21 protrudes from the first side surface 11 and is formed integrally with the first side surface 11.

Figure 2

FIG.2

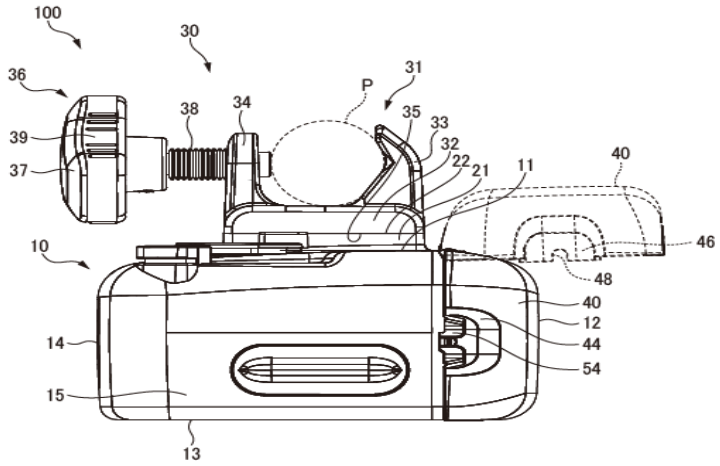

APPLICATIONS PUBLISHED UNDER SECTION 27 - cont'd

(12) SG PATENT APPLICATION

(13) A

(43) Publication Date: 31/01/2024

(21) Application No: 10202301572X

(71) Applicant(s): DISCO CORPORATION

(22) Date of filing: 05/06/2023

(72) Inventor(s): Yuto MAEDA

(30) Priority Data:
2022-098584
20/06/2022
JP

(74) Agent(s): MIRANDAH ASIA (SINGAPORE) PTE LTD

(51) International Patent Classification:

(54) Title of Invention: GRINDING APPARATUS

(57) Abstract:

There is provided a grinding apparatus used at the time of grinding a workpiece. The grinding apparatus includes a chuck table that has a holding surface for holding the workpiece, a grinding unit that has a spindle to which a grinding wheel in which a plurality of grindstones are arrayed in an annular shape is mounted, and an exterior cover that includes an opening facing the grinding unit and a door capable of covering the opening and that covers both the chuck table and the grinding unit. In the grinding apparatus, on an inner surface of the door that faces the grinding unit in a closed state in which the opening is covered by the door, a work bench that is folded to prevent interference with the grinding unit in the closed state is provided.

[FIG. 3]

FIG.3

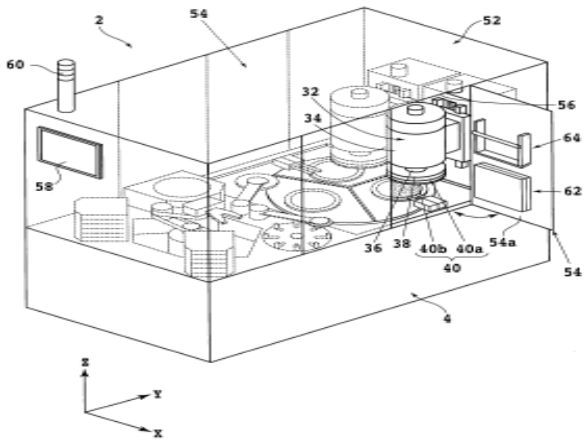

APPLICATIONS PUBLISHED UNDER SECTION 27 - cont'd

(12) SG PATENT APPLICATION

(13) A

(43) Publication Date: 31/01/2024

(21) Application No: 10202301573Q

(71) Applicant(s): DISCO CORPORATION

(22) Date of filing: 05/06/2023

(72) Inventor(s): Masaru NAKAMURA

(30) Priority Data:
2022-098739
20/06/2022
JP

(74) Agent(s): MIRANDAH ASIA (SINGAPORE) PTE LTD

(51) International Patent Classification:

(54) Title of Invention: VERIFICATION METHOD FOR DEVICE CHIPS

(57) Abstract:

A verification method for device chips, includes a providing step of providing a wafer having a front surface with a plurality of devices formed thereon and demarcated by streets, the devices including non-defective devices and defective devices that are distinguished from each other based on an electrical characteristic, a dividing step of dividing the wafer into individual device chips along the streets, a defective device chip extracting step of extracting defective device chips from the individual device chips, the defective device chips corresponding to the defective devices and being defective in the electrical characteristic, and a verification step of verifying a physical characteristic of each of the extracted defective device chips.

[FIG. 3]

FIG.3

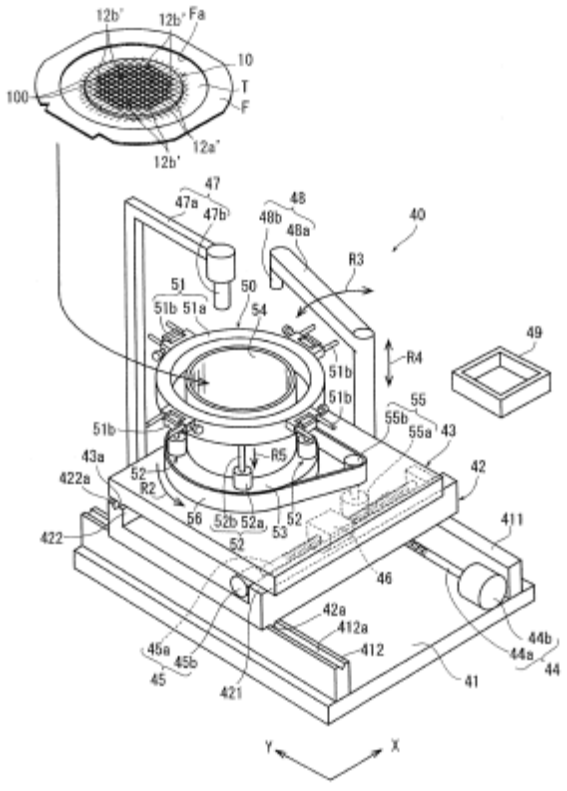

APPLICATIONS PUBLISHED UNDER SECTION 27 - cont'd

(12) SG PATENT APPLICATION

(13) A

(43) Publication Date: 31/01/2024

(21) Application No: 10202301574T

(71) Applicant(s): DISCO CORPORATION

(22) Date of filing: 05/06/2023

(72) Inventor(s): Yoshimasa KOJIMA

(30) Priority Data:
2022-099554
21/06/2022
JP

(74) Agent(s): MIRANDAH ASIA (SINGAPORE) PTE LTD

(51) International Patent Classification:

(54) Title of Invention: POSITIONING METHOD

(57) Abstract:

A positioning method includes detecting coordinates (X_{11}, Y_{11}) of a rotation center on a surface of a holding table with a first image capturing unit and stores the detected coordinates as a new first reference position, detecting coordinates (X_{21}, Y_{21}) of a rotation center on another surface of the holding table with a second image capturing unit and stores the detected coordinates as a new second reference position, calculating a first deviation between a previous rotation center on the surface of the holding table and the coordinates (X_{11}, Y_{11}), calculating a second deviation between a previous rotation center on the other surface of the holding table and the coordinates (X_{21}, Y_{21}), correcting a coordinate system of images captured by the first image capturing unit to eliminate the first deviation, and correcting a coordinate system of images captured by the second image capturing unit to eliminate the second deviation.

[FIG. 1]

FIG. 1

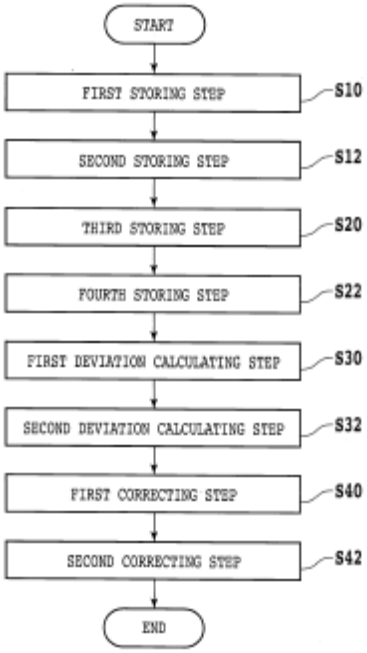

APPLICATIONS PUBLISHED UNDER SECTION 27 - cont'd

(12) SG PATENT APPLICATION

(13) A

(43) Publication Date: 31/01/2024

(21) Application No: 10202301581Y

(71) Applicant(s): Wuhan MEMSonics Technologies Co., Ltd.

(22) Date of filing: 05/06/2023

(72) Inventor(s): SUN, Chengliang; CAI, Yao; SOON, Bowoon; DING, Zhipeng; LIN, Binghui

(30) Priority Data:
202210643790.X
08/06/2022
CN

(74) Agent(s): BIRD & BIRD ATMD LLP

(51) International Patent Classification:

(54) Title of Invention: FILM BULK ACOUSTIC WAVE RESONATOR AND PREPARATION METHOD THEREOF

(57) Abstract:

The present disclosure provides a film bulk acoustic wave resonator and a preparation method thereof, and relates to the technical field of semiconductors. The film bulk acoustic wave resonator includes a substrate and a bottom electrode, a piezoelectric layer and a top electrode which are located on an upper surface of the substrate, the bottom electrode is provided with a first arched part so as to form a first cavity between the first arched part and the substrate; and a first reflection cavity is formed between the bottom electrode and the piezoelectric layer and located in a slope of the first arched part, the bottom electrode is provided with the first arched part and the first reflection cavity may be located in an oblique plane of the slope of the first arched part, and thus, when the first reflection cavity reflects, by the slope, transverse acoustic waves, the transverse acoustic waves are reflected many times, thereby dissipating energy of the transverse acoustic waves, so as to further reduce a transverse parasitic mode, and improve a quality factor of the film bulk acoustic wave resonator.

Fig. 13

Fig. 13

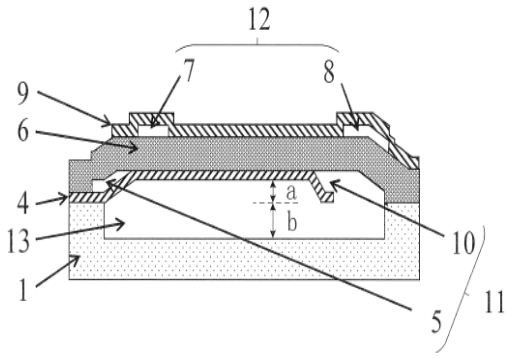

APPLICATIONS PUBLISHED UNDER SECTION 27 - cont'd

(12) SG PATENT APPLICATION

(13) A

(43) Publication Date: 31/01/2024

(21) Application No: 10202301583U

(71) Applicant(s): RINNAI CORPORATION

(22) Date of filing: 05/06/2023

(72) Inventor(s): Takeshi Fukaya

(30) Priority Data:
2022-101288
23/06/2022
JP

(74) Agent(s): Amica Law LLC

(51) International Patent Classification:

(54) Title of Invention: STOVE BURNER AND GAS STOVE

(57) Abstract:

A stove burner and a gas stove burn a fuel gas properly in continuous and prolonged use with high heat. A stove burner (10) includes a burner body (30) including a disk-shaped bottom plate (31) and an outer cylinder (32), a burner head (20) on the outer cylinder, and a gas feeder (50) connected to the bottom plate from below at the center to feed a fuel gas. The gas feeder supports weights of the burner head and the burner body at the bottom plate center. A deformation restrictor (44) formed of a material with a higher melting point than the material of the burner body is attached to the bottom plate. The deformation restrictor receives a large bending load under the weights of the burner head and the burner body. This structure reduces deformation of the bottom plate at high temperatures of the burner head and the burner body, and burns a fuel gas properly.

Fig. 7

FIG. 7

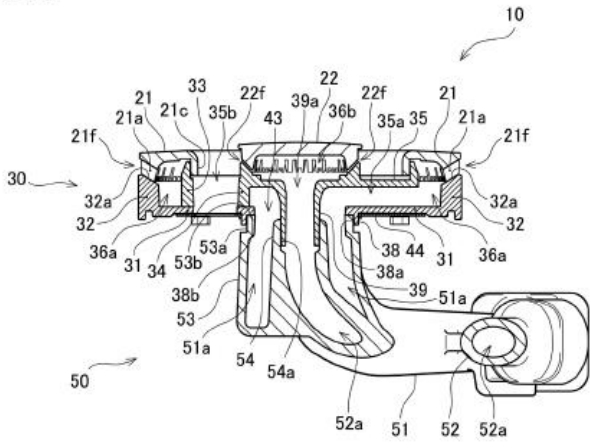

APPLICATIONS PUBLISHED UNDER SECTION 27 - cont'd

(12) SG PATENT APPLICATION

(13) A

(43) Publication Date: 31/01/2024

(21) Application No: 10202301584S

(71) Applicant(s): Nanyang Technological University

(22) Date of filing: 05/06/2023

(72) Inventor(s): SRINIVASAN, Madhavi; LIN, Wenlin Yvonne; DO, Minh Phuong

(30) Priority Data:
10202250017Q
03/06/2022
SG

(74) Agent(s): SPRUSON & FERGUSON (ASIA) PTE. LTD.

(51) International Patent Classification:

(54) Title of Invention: DISCHARGING BATTERIES WITH ASH

(57) Abstract:

The present disclosure provides a method of discharging a battery comprising contacting the battery with ash, ash suspension, or ash leachate, wherein the ash, ash suspension, or ash leachate comprises at least one ion selected from the group consisting of chloride, sulphate, sulphide, hydroxide, carbonate, and phosphate. The present disclosure also provides a method of reducing at least one ion content in ash comprising contacting a battery with ash, ash suspension or ash leachate, wherein the ion is selected from the group consisting of chloride, sulphate, sulphide, hydroxide, carbonate, and phosphate. The present disclosure further provides a system for discharging a battery and/or reducing ion content in ash, comprising: a reactor chamber; a perforated battery container disposed within the reactor chamber, wherein the perforated battery container is configured to contain a battery; a motor connected to the perforated battery container, wherein the motor is configured to move the perforated battery container; an ash inlet connected to the reactor chamber, wherein the ash inlet is configured to feed ash into the reactor chamber; and a water inlet connected to the reactor chamber, wherein the water inlet is configured to feed water into the reactor chamber.

[No suitable figure]

APPLICATIONS PUBLISHED UNDER SECTION 27 - cont'd

(12) SG PATENT APPLICATION

(13) A

(43) Publication Date: 31/01/2024

(21) Application No: 10202301585V

(71) Applicant(s): RINNAI CORPORATION

(22) Date of filing: 05/06/2023

(72) Inventor(s): Kazuhiro ASAI;Takeshi Fukaya

(30) Priority Data:
2022-104006
28/06/2022
JP

(74) Agent(s): Amica Law LLC

(51) International Patent Classification:

(54) Title of Invention: STOVE BURNER AND GAS STOVE

(57) Abstract:

A stove burner (10) and a gas stove (1) burn a fuel gas properly in continuous and prolonged use with high heat. The stove burner includes a burner body (30) including a disk-shaped bottom plate (31) and an outer cylinder (32), a burner head (20) mounted on the outer cylinder, and a gas feeder (50) connected to the bottom plate from below at the center to feed a fuel gas. The gas feeder supports weights of the burner head and the burner body at the center of the bottom plate. The bottom plate receives a large bending load under the weights of the burner head and the burner body. Reinforcing ribs (44) are located on a lower surface of the bottom plate. This structure reduces deformation of the bottom plate at high temperatures of the burner head and the burner body, and burns a fuel gas properly.

Fig. 5

FIG. 5

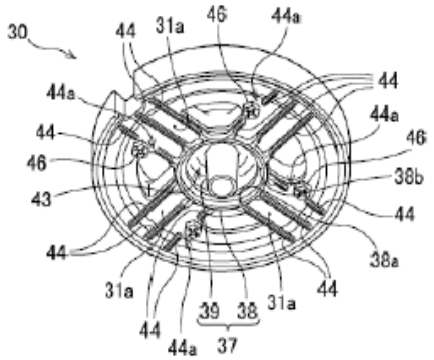

APPLICATIONS PUBLISHED UNDER SECTION 27 - cont'd

(12) SG PATENT APPLICATION

(13) A

(43) Publication Date: 31/01/2024

(21) Application No: 10202301588Q

(71) Applicant(s): Tokyo Electron Limited

(22) Date of filing: 06/06/2023

(72) Inventor(s): TAKAHASHI, Kae; TOMURA, Maju; KIHARA, Yoshihide; ARIMA, Noriyoshi

(30) Priority Data:
2022-094167
10/06/2022
JP

2023-061964
06/04/2023
JP

(74) Agent(s): RODYK IP

(51) International Patent Classification:

(54) Title of Invention: ETCHING METHOD AND PLASMA PROCESSING SYSTEM

(57) Abstract:

An etching method is implementable with a plasma processing apparatus including a chamber. The method includes (a) providing, in the chamber, a substrate including an etching target film and a mask on the etching target film, and (b) etching the etching target film using plasma generated from a process gas including a hydrogen fluoride gas. The mask contains at least one metal selected from the group consisting of tungsten, molybdenum, ruthenium, titanium, indium, gallium, and zinc.

Fig. 1

FIG. 1

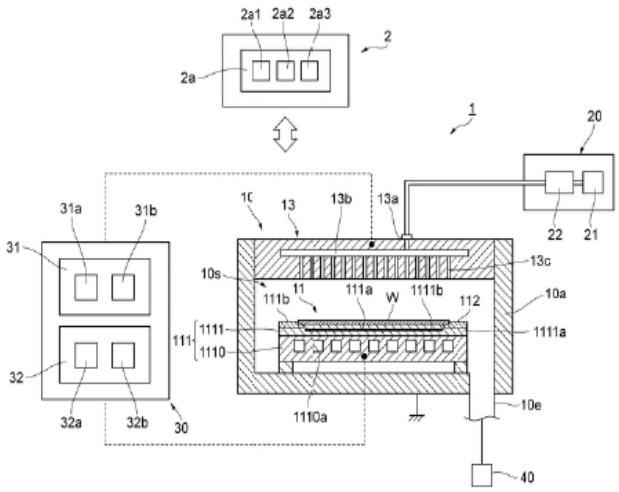

APPLICATIONS PUBLISHED UNDER SECTION 27 - cont'd

(12) SG PATENT APPLICATION

(13) A

(43) Publication Date: 31/01/2024

(21) Application No: 10202301596W

(71) Applicant(s): ZHEJIANG JINKO SOLAR CO., LTD.;JINKO SOLAR CO., LTD.

(22) Date of filing: 07/06/2023

(72) Inventor(s): Kongsong CHEN; Menglei XU; Jie YANG; Xinyu ZHANG

(30) Priority Data:
202210646083.6
08/06/2022
CN

(74) Agent(s): NANYANG LAW LLC

(51) International Patent Classification:

(54) Title of Invention: SOLAR CELL AND PHOTOVOLTAIC MODULE

(57) Abstract:

A solar cell includes: a substrate having front and back surfaces opposite to each other, the back surface includes first regions, second regions and gap regions, the first regions and the second regions are staggered and spaced from each other in a first direction, and each gap region is provided between one first region and one adjacent second region; a first conductive layer formed over the first region; a second conductive layer formed over the second region, the second conductive layer has a conductivity type opposite to the first conductive layer; a first electrode forming electrical contact with the first conductive layer; a second electrode forming electrical contact with the second conductive layer; and first pyramidal texture structures formed on the back surface corresponding to the gap regions. A curved interface region is formed between side wall of the first/second conductive layer and side wall of the adjacent gap region.

(Fig. 2)

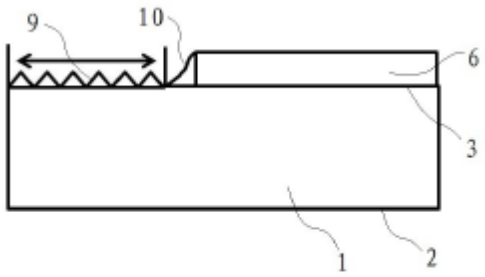

FIG. 2

APPLICATIONS PUBLISHED UNDER SECTION 27 - cont'd

(12) SG PATENT APPLICATION

(13) A

(43) Publication Date: 31/01/2024

(21) Application No: 10202301597R

(71) Applicant(s): ZHEJIANG JINKO SOLAR CO., LTD.;JINKO SOLAR CO., LTD.

(22) Date of filing: 07/06/2023

(72) Inventor(s): Xiu FENG; Menglei XU; Jie YANG; Xinyu ZHANG

(30) Priority Data:
202210647861.3
08/06/2022
CN

(74) Agent(s): NANYANG LAW LLC

(51) International Patent Classification:

(54) Title of Invention: SOLAR CELL AND PHOTOVOLTAIC MODULE

(57) Abstract:

A solar cell including: a substrate having front and back surfaces, the back surface includes first, second and gap regions, the first and second regions are staggered and spaced from each other in a first direction, and each gap region is provided between one first region and one second region adjacent thereto by recessing toward interior of the substrate; a first conductive layer formed over the first region; a second conductive layer formed over the second region, the second conductive layer has a conductivity type opposite to the first conductive layer; a first electrode forming electrical contact with the first conductive layer; a second electrode forming electrical contact with the second conductive layer; and a boundary region between the gap region and the first and/or second conductive layer adjacent thereto, and a line-pattern concave and convex texture structure is formed on the back surface corresponding to the boundary region.

(Fig. 2)

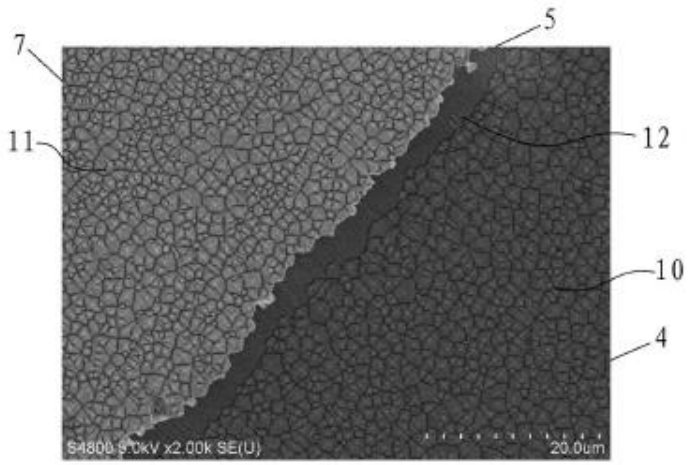

FIG. 2

APPLICATIONS PUBLISHED UNDER SECTION 27 - cont'd

(12) SG PATENT APPLICATION

(13) A

(43) Publication Date: 31/01/2024

(21) Application No: 10202301608R

(71) Applicant(s): ANAM145

(22) Date of filing: 07/06/2023

(72) Inventor(s): LEE, JUNGHEE;SIM, JUNSIK

(30) Priority Data:
10-2022-0069425
08/06/2022
KR

(74) Agent(s): Henry Goh (S) Pte Ltd

(51) International Patent Classification:

(54) Title of Invention: PORTABLE ELECTRONIC DEVICE FOR CRYPTOCURRENCY TRANSACTIONS

(57) Abstract:

The disclosure relates to a portable electronic device for cryptocurrency transactions, which provides user convenience and security. According to an embodiment, a portable electronic device for cryptocurrency transactions may include a storage storing an electronic wallet in which at least one of a private key for cryptocurrency transactions or a non-fungible token (NFT) is stored, an operating system (OS), a web browser, and a cryptocurrency transaction application, a network interface for communication with the outside, a display, and a controller. The controller may be configured to operate as programed in the OS, block introduction of an execution code from the network interface, and block installation of a new application or plug-in other than the cryptocurrency transaction application stored in the storage.

[FIG. 1]

FIG. 1



APPLICATIONS PUBLISHED UNDER SECTION 27 - cont'd

(12) SG PATENT APPLICATION

(13) A

(43) Publication Date: 31/01/2024

(21) Application No: 10202301614W

(22) Date of filing: 08/06/2023

(30) Priority Data:
2208546.8
10/06/2022
GB

(74) Agent(s): MCLAUGHLIN IP PTE. LTD.

(51) International Patent Classification:

(54) Title of Invention: A MOTOR CONTROL CONTROLLER SYSTEM AND METHODS

(57) Abstract:

The present disclosure relates to an energy management system for a motor controller system for optimising power signals for different operating voltages of electrically commutated motors. The energy management system comprises a bi-directional energy converter comprising a first input/output terminal and a second input/output terminal, a first waveform controller, and a second waveform controller. The bi-directional energy converter is coupled to the first waveform controller and to the second waveform controller. The first waveform controller is coupled to the second input/output terminal and the second waveform controller is coupled to the first input/output terminal. The bi-directional energy converter is configured to receive a first input voltage at the first input/output terminal and generate a first output voltage in a first operating direction and receive a second input voltage at the second input/output terminal and generate a second output voltage in a second operating direction.

Figure 1

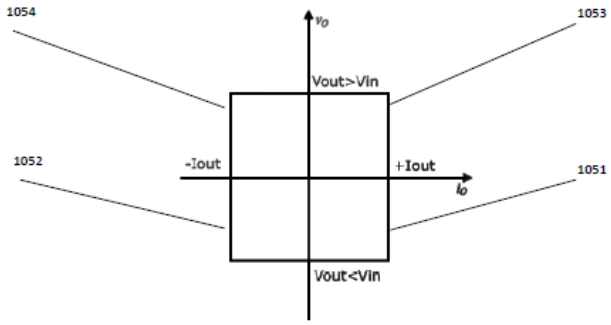

Fig. 1

APPLICATIONS PUBLISHED UNDER SECTION 27 - cont'd

(12) SG PATENT APPLICATION

(13) A

(43) Publication Date: 31/01/2024

(21) Application No: 10202301666V

(71) Applicant(s): DISCO CORPORATION

(22) Date of filing: 13/06/2023

(72) Inventor(s): Satoshi YAMANAKA

(30) Priority Data:
2022-098906
20/06/2022
JP

(74) Agent(s): MIRANDAH ASIA (SINGAPORE) PTE LTD

(51) International Patent Classification:

(54) Title of Invention: PROCESSING EQUIPMENT

(57) Abstract:

Processing equipment including a processing apparatus including a chuck table, a suction apparatus supplying a negative pressure to the chuck table, a first base that supports the processing apparatus, and a second base that supports the suction apparatus. The second base has, at a bottom part thereof, multiple leg parts that are disposed in such a manner as to penetrate through through-holes provided in the first base, without getting contact with the first base, and are each capable of extension and contraction. The second base is allowed to be supported by the first base through contracting of each of the multiple leg parts when the processing and suction apparatuses are to be conveyed. The second base stands by itself without getting contact with the first base, through extending of each of the multiple leg parts when the processing and suction apparatuses are to be installed on a floor surface.

[FIG. 2]

FIG.2

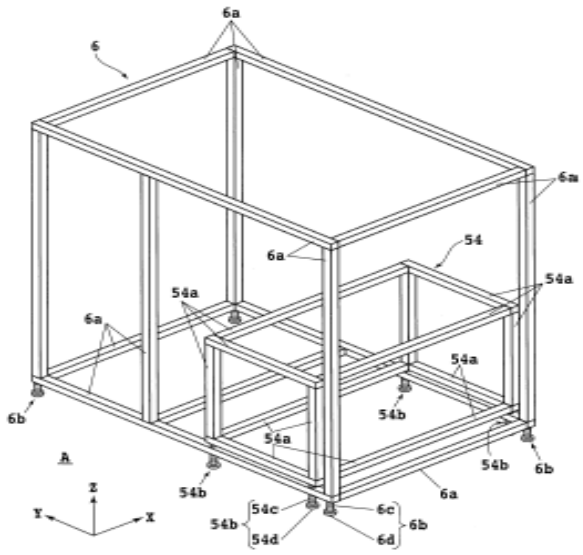

APPLICATIONS PUBLISHED UNDER SECTION 27 - cont'd

(12) SG PATENT APPLICATION

(13) A

(43) Publication Date: 31/01/2024

(21) Application No: 10202301667W

(71) Applicant(s): JU YUH ENTERPRISE

(22) Date of filing: 13/06/2023

(72) Inventor(s): CHIN, LIANG-CHIH; LU, HSIU-CHIN; HUANG, CHING-CHING

(30) Priority Data:
111123609
24/06/2022
TW

(74) Agent(s): WONG & LEOW LLC

(51) International Patent Classification:

(54) Title of Invention: Negative Pressure Delivery System

(57) Abstract:

Provided is a negative pressure delivery system comprising a container temporary storage storing a container; a transfer and identification module for transferring the container and determining according to a label on the container; a sending module including a body and a rotary disc accommodated within the body, the rotary disc being driven by the driving source so as to be rotatable about a horizontal center axis; a receiving module including a negative pressure generator and a negative pressure compartment; a transfer pipeline connecting the sending module and the receiving module; and a controller coupled to and in communication with the sending module, the receiving module, and the transfer and identification module.

[FIGURE 2]

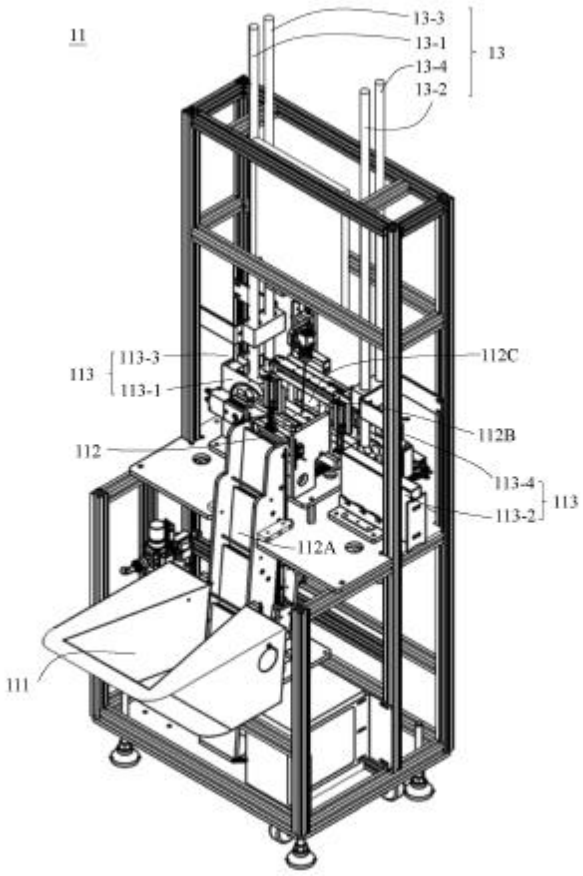

FIG. 2

APPLICATIONS PUBLISHED UNDER SECTION 27 - cont'd

(12) SG PATENT APPLICATION

(13) A

(43) Publication Date: 31/01/2024

(21) Application No: 10202301669P

(22) Date of filing: 13/06/2023

(71) Applicant(s): Nozomi Networks Sagl

(72) Inventor(s): KLEYMENOV, Alexey; CARULLO, Moreno; CARCANO, Andrea

(30) Priority Data: 17/855,940 01/07/2022 US

(74) Agent(s): Amica Law LLC

(51) International Patent Classification:

(54) Title of Invention: METHOD FOR AUTOMATIC SIGNATURES GENERATION FROM A PLURALITY OF SOURCES

(57) Abstract:

The present invention relates to a method for automatic signatures generation from a plurality of sources comprising collecting input samples from the sample providers and extracting raw IoCs from the input samples, verifying the input samples defining verified input samples, evaluating the reputation of each of the raw IoCs according to predefined reputation rules and comparing each of the raw IoCs with a database of existing signatures to define allowable raw IoCs and generating verified signatures from the verified input samples creating the verified signatures from the verified input samples corresponding to the allowable raw IoCs.

FIG. 1

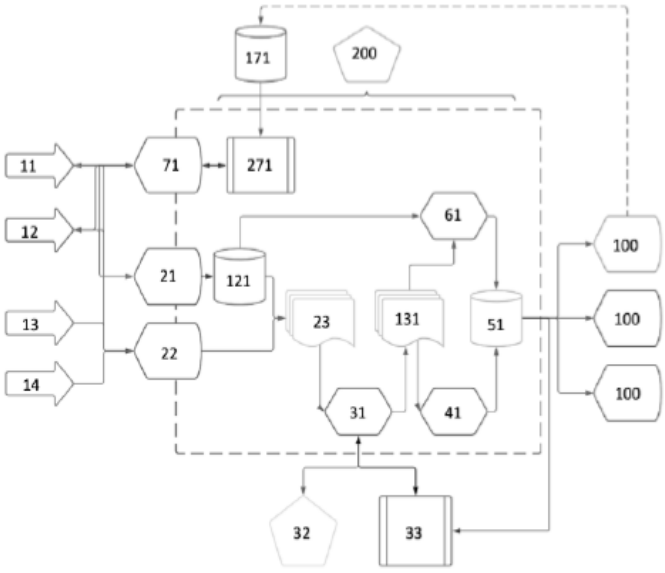

FIG. 1

APPLICATIONS PUBLISHED UNDER SECTION 27 - cont'd

(12) SG PATENT APPLICATION

(13) A

(43) Publication Date: 31/01/2024

(21) Application No: 10202301671V

(71) Applicant(s): TOSHIBA ELEVATOR KABUSHIKI KAISHA

(22) Date of filing: 13/06/2023

(72) Inventor(s): KUGE, Keisuke

(30) Priority Data:
2022-096350
15/06/2022
JP

(74) Agent(s): SPRUSON & FERGUSON (ASIA) PTE. LTD.

(51) International Patent Classification:

(54) Title of Invention: DEVICE FOR MEASURING STEP BRAKING DISTANCE OF PASSENGER CONVEYOR AND METHOD THEREFOR

(57) Abstract:

The step braking distance measuring device 100 has: a measuring section 120 that is disposed at a base point O at a higher location than steps 30, measures a first angle θ1 defined by a first line S1 and a perpendicular line R from the base point O, and measures a second angle θ2 defined by the perpendicular line R and a second line S2, the first line S1 connecting the base point O and a first position P1 of a reflector 304 of a reference step 30 at the time when a stop signal is output, and the second line S2 connecting the base point O and a second position P2 of the reflector 304 of the stopped reference step 30; and an arithmetic section 118 that calculates a braking distance L of the reference step 30 from the first angle θ1, the second angle θ2, and a length h of the perpendicular line R from the base point O to a height at which the reference step 30 exists.

Selected drawing: FIG. 3

FIG. 3

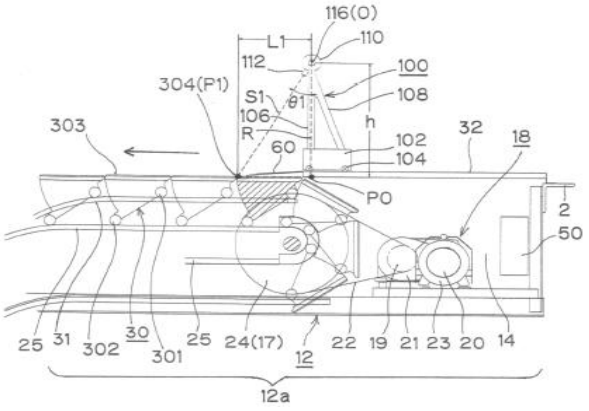

APPLICATIONS PUBLISHED UNDER SECTION 27 - cont'd

(12) SG PATENT APPLICATION

(13) A

(43) Publication Date: 31/01/2024

(21) Application No: 10202301678X

(71) Applicant(s): Tintra 3.0 Limited

(22) Date of filing: 13/06/2023

(72) Inventor(s): David Peter SMITH; Joseph Michael William LYSKE

(30) Priority Data:
2208742.3
14/06/2022
GB

2209572.3
29/06/2022
GB

17/857,090
04/07/2022
US

18/126,423
25/03/2023
US

18/195,754
10/05/2023
US

(74) Agent(s): CANTAB IP PTE. LTD.

(51) International Patent Classification:

(54) Title of Invention: System and Method for Authentication and Association of Multi-Platform Accounts

(57) Abstract:

We describe the verification and authentication of independent digital wallets and, particularly, the linking of regulated and unregulated digital wallets on a public blockchain. An unregulated trading system has a public certificate module arranged selectively to write NFTs into specific unregulated accounts. A public ledger database of the blockchain system stores unregulated accounts which each contain: (i) a document type identifier having a related minted unique non-transferable NFT linked to an externally generated certificate hash and where each non-transferable NFT is obtained via writing of a smart contract and each non-transferable NFT is a permanent record for a description of the document type; and (ii) a link to a private wallet of a regulated account of a regulated trading platform. The link relates directly to the minted non-transferable NFT issued from the certificate module. Each non-transferable NFT is configured to be changed or moved from the unregulated wallet only through an interaction that directly involves the certificate module.

Figure 2

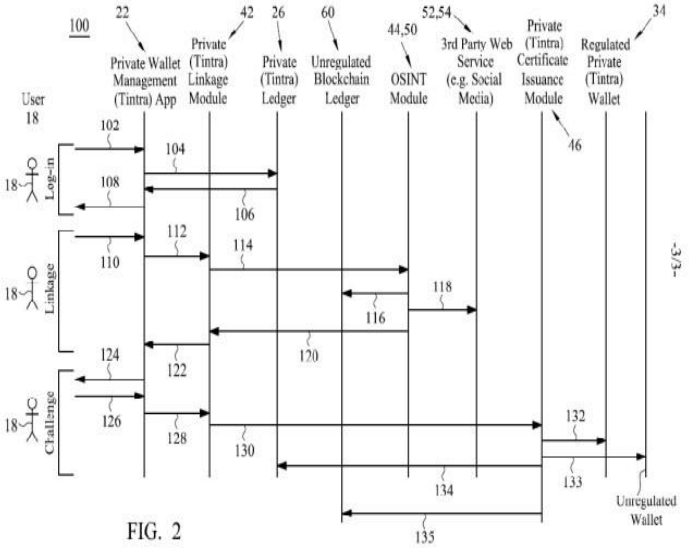

FIG. 2

APPLICATIONS PUBLISHED UNDER SECTION 27 - cont'd

(12) SG PATENT APPLICATION

(13) A

(43) Publication Date: 31/01/2024

(21) Application No: 10202301681T

(71) Applicant(s): TOSHIBA ELEVATOR KABUSHIKI KAISHA

(22) Date of filing: 14/06/2023

(72) Inventor(s): AKIYAMA Ryosuke

(30) Priority Data:
2022-098707
20/06/2022
JP

(74) Agent(s): SPRUSON & FERGUSON (ASIA) PTE. LTD.

(51) International Patent Classification:

(54) Title of Invention: PASSENGER CONVEYOR SYSTEM AND MOVING BODY

(57) Abstract:

An escalator 10 has: a right and left pair of balustrades 36, on each of which a handrail belt 38 runs; a step 30 moving between the right and left pair of the balustrades 36 in a front-rear direction from one landing to another landing; and a left LED 70 and a right LED 76, each of which is provided along the front-rear direction in an upper portion of the balustrade 36. A moving body 100 moves on the step 30 and has: a left sensor 110 and a right sensor 112 respectively detecting illuminance from the left LED 70 and the right LED 76; and a robot control section 104 storing illumination information in a chronological order, the illumination information indicating an illumination state of each of the left LED 70 and the right LED 76, each of which is provided at each position on the balustrade 36, on the basis of the illuminance detected by the respective sensors.
(Figure 1)

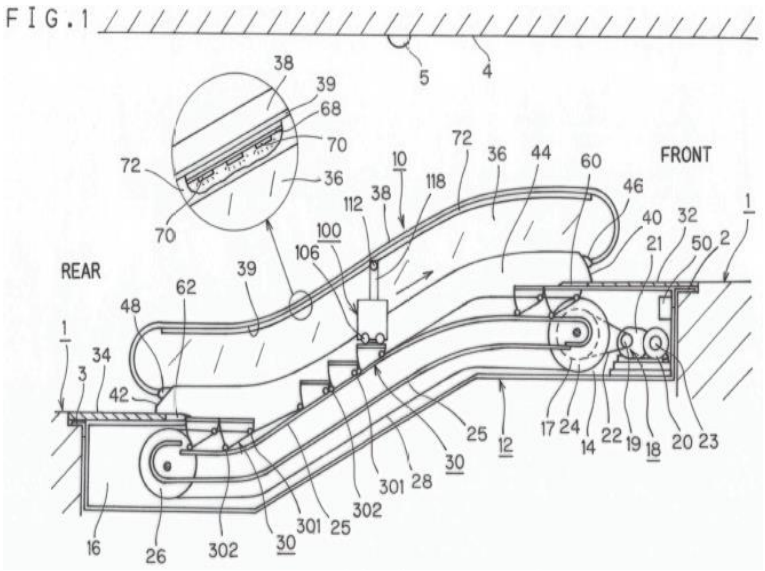

APPLICATIONS PUBLISHED UNDER SECTION 27 - cont'd

(12) SG PATENT APPLICATION

(13) A

(43) Publication Date: 31/01/2024

(21) Application No: 10202301686W

(71) Applicant(s): KOKUSAI ELECTRIC CORPORATION

(22) Date of filing: 14/06/2023

(72) Inventor(s): DEGAI, Motomu;NAKATANI, Kimihiko

(30) Priority Data:
2022-098420
17/06/2022
JP

(74) Agent(s): Allen & Gledhill LLP

(51) International Patent Classification:

(54) Title of Invention: METHOD OF PROCESSING SUBSTRATE, METHOD OF MANUFACTURING SEMICONDUCTOR DEVICE, SUBSTRATE PROCESSING APPARATUS, AND PROGRAM

(57) Abstract:

There is provided a technique that includes: performing a cycle a predetermined number of times, the cycle including: (a) forming a first layer on a surface of a first film by supplying a processing agent to a substrate including the first film on a surface of the substrate; and (b) etching the first layer and at least a portion of the first film by supplying an etching agent to the substrate, wherein in (b), when etching the first layer, a substance X that reacts with the etching agent but does not contribute alone to the etching is generated, and the first layer and the at least a portion of the first film are etched by using a mixture of the substance X and the etching agent.

FIGS. 4B and 4D

FIG. 4B

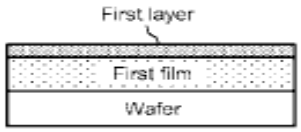

FIG. 4D

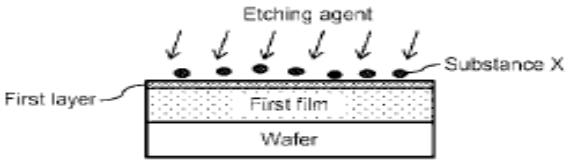

APPLICATIONS PUBLISHED UNDER SECTION 27 - cont'd

(12) SG PATENT APPLICATION

(13) A

(43) Publication Date: 31/01/2024

(21) Application No: 10202301704X

(71) Applicant(s): SAMSUNG ELECTRONICS CO., LTD.

(22) Date of filing: 15/06/2023

(72) Inventor(s): Donggeon Lee; Jungoo Kang; Dayeon Nam; Juwon Park; Sungjoon Yoon

(30) Priority Data:
10-2022-0073469
16/06/2022
KR

(74) Agent(s): VIERING, JENTSCHURA & PARTNER LLP

(51) International Patent Classification:

(54) Title of Invention: SEMICONDUCTOR DEVICE

(57) Abstract:

A semiconductor device includes a lower structure, first electrodes spaced apart from each other on the lower structure, a second electrode on the first electrodes, and a dielectric layer between the first electrodes and the second electrode. Each of the first electrodes includes a first element, a second element, and nitrogen (N). A degree of stiffness of a first nitride material including the first element is higher than a degree of stiffness of a second nitride material including the second element. Each of the first electrodes includes a region in which a ratio of a concentration of the first element in the region to a concentration of the second element in the region decreases in a horizontal direction, away from a side surface of each of the first electrodes.

FIG. 3A

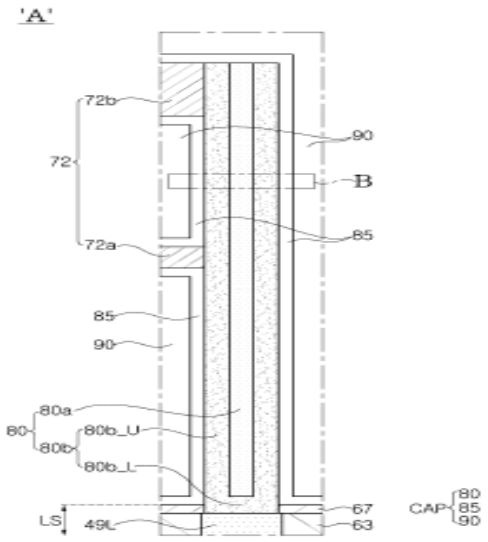

FIG. 3A

APPLICATIONS PUBLISHED UNDER SECTION 27 - cont'd

(12) SG PATENT APPLICATION

(13) A

(43) Publication Date: 31/01/2024

(21) Application No: 10202301707S

(71) Applicant(s): CueZen Inc.

(22) Date of filing: 15/06/2023

(72) Inventor(s): Jodi Jia Fang CHIAM; Aloysius Shao Qin LIM; Hooi LI; Sunil SHINDE; Ankur TEREDESAI

(30) Priority Data:
10202250173Q
15/06/2022
SG

(74) Agent(s): DREW & NAPIER LLC

(51) International Patent Classification:

(54) Title of Invention: SYSTEM AND METHOD FOR FACILITATING COMPLIANCE AND BEHAVIORAL ACTIVITY VIA SIGNALS DRIVEN BY ARTIFICIAL INTELLIGENCE

(57) Abstract:

A system for facilitating compliance and behavioral activity via signals driven by artificial intelligence is provided. In particular, the system obtains data associated with a participant from a plurality of data sources. The system may determine markers associated with the participant based on the data and may also determine a goal for the participant. The system may determine paths that the participant has taken towards the goal and may determine actions for the participant to take to advance towards the goal. The system may generate cues based on markers, the goal, the paths, segments, topics, and/or actions to motivate the participant to perform the actions. The cues are ranked and delivered to the participant based on the rank. Interactions with the cues may be monitored by the system and telemetry data relating thereto may be utilized to update artificial intelligence models of the system to enhance the cue generation process.

(No figure no.)

APPLICATIONS PUBLISHED UNDER SECTION 27 - cont'd

(12) SG PATENT APPLICATION

(13) A

(43) Publication Date: 31/01/2024

(21) Application No: 10202301711V

(22) Date of filing: 16/06/2023

(30) Priority Data:
202210704732.3
21/06/2022
CN

(51) International Patent Classification:

(54) Title of Invention: SEMICONDUCTOR SUBSTRATE, SOLAR CELL, AND PHOTOVOLTAIC MODULE

(71) Applicant(s): ZHEJIANG JINKO SOLAR CO., LTD.;JINKO SOLAR CO., LTD.

(72) Inventor(s): Huimin LI; Menglei XU; Jie YANG; Xinyu ZHANG

(74) Agent(s): NANYANG LAW LLC

(57) Abstract:

A semiconductor substrate, including a back surface having N-type conductive regions and P-type conductive regions. The N-type conductive regions are provided with first non-pyramidal texture structures, and the P-type conductive regions are provided with second non-pyramidal texture structures. A top surface of the first non-pyramidal texture structure is a polygonal plane, and a top surface of the second non-pyramidal texture structure is a polygonal plane. A one-dimensional size of the top surface of the first non-pyramidal texture structure is less than a one-dimensional size of the top surface of the second non-pyramidal texture structure. The one-dimensional size of the top surface of the first non-pyramidal texture structure is in a range of 5 μm to 12 μm. The one-dimensional size of the top surface of the second non-pyramidal texture structure is in a range of 10 μm to 40 μm.

(Fig. 1)

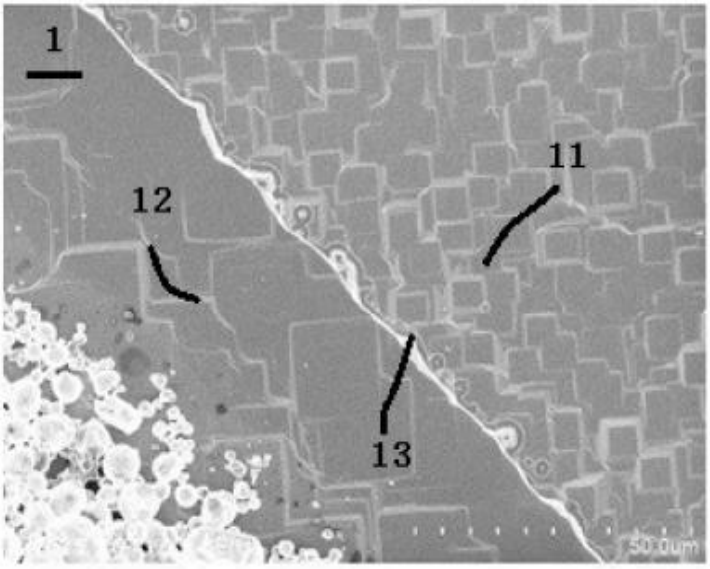

FIG. 1

APPLICATIONS PUBLISHED UNDER SECTION 27 - cont'd

(12) SG PATENT APPLICATION

(13) A

(43) Publication Date: 31/01/2024

(21) Application No: 10202301731P

(71) Applicant(s): Fujitsu Limited;Japan Medical Device Corporation;UT-Heart Inc.

(22) Date of filing: 19/06/2023

(72) Inventor(s): Jinse SHIMO; Kazuo MINAMI; Shuichi CHIBA; Yoshihiko TOKUMARU; Takafumi OKANO; Seiryo SUGIURA; Jun-ichi OKADA; Toshiaki HISADA; Takumi WASHIO; Masahiro WATANABE; Yasutomo SHIMIZU

(30) Priority Data:
2022-106014
30/06/2022
JP

(74) Agent(s): Donaldson & Burkinshaw LLP

(51) International Patent Classification:

(54) Title of Invention: THREE-DIMENSIONAL SHAPE DATA GENERATION PROGRAM, THREE-DIMENSIONAL SHAPE DATA GENERATION METHOD, AND INFORMATION PROCESSING APPARATUS

(57) Abstract:

An information processing apparatus generates heart shape data indicating a three-dimensional shape including an internal structure of a heart of a subject based on echo image data indicating a cross-sectional image of the heart. The information processing apparatus then generates thorax shape data indicating a three-dimensional shape of a thorax of the subject based on X-ray image data indicating an X-ray image of the thorax of the subject. The information processing apparatus then decides, based on an image of the heart appearing in the X-ray image, a position and an orientation of the three-dimensional shape of the heart indicated by the heart shape data within the three-dimensional shape of the thorax indicated by the thorax shape data.

FIG. 1

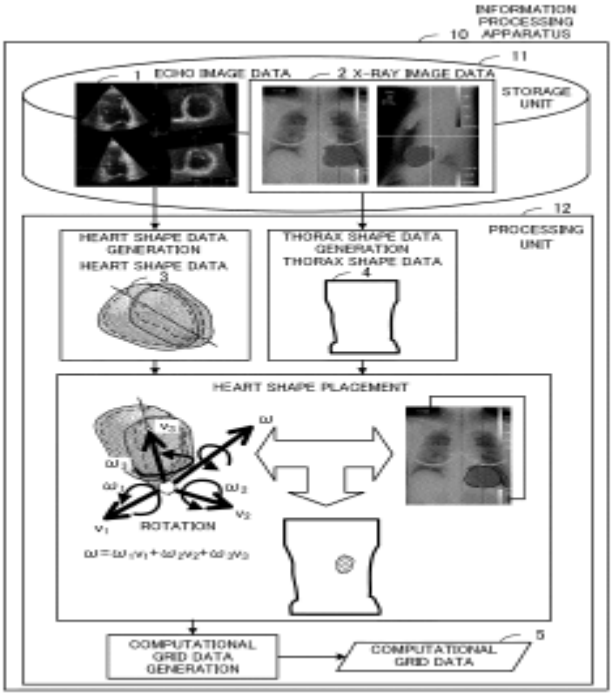

FIG. 1

APPLICATIONS PUBLISHED UNDER SECTION 27 - cont'd

(12) SG PATENT APPLICATION

(13) A

(43) Publication Date: 31/01/2024

(21) Application No: 10202301732Y

(71) Applicant(s): VFLOWTECH PTE. LTD.

(22) Date of filing: 19/06/2023

(72) Inventor(s): Arjun Bhattarai; Purna Chandra Ghimire; Ravi Ranjan; Gundla Palli Ravendra

(30) Priority Data:
10202250224U
20/06/2022
SG

(74) Agent(s): VFLOWTECH PTE. LTD.

(51) International Patent Classification:

(54) Title of Invention: INTERDIGITATED FLOW-FIELD WITH TAILORED HEADER FOR UNIFORM DISTRIBUTION OF ELECTROLYTE IN REDOX FLOW BATTERIES

(57) Abstract:
The invention relates to interdigitated flow-fields with tailored header for uniform distribution of electrolyte in redox flow batteries. The design of a flow-field using the concept of interdigitated distribution between the flow-channels is adopted. A tailored inlet header in the interdigitated flow-field with associated design of the flow-channel configuration to obtain desired distribution of electrolyte at minimal pressure drop. This interdigitated flow-field differs from conventional flow-field patterns by having inlet of fluid to entrance channel but the exit through the adjacent exit channel which is interdigitated with the entrance channel. The transport of fluid from entrance channel to exit channel occurs by forced convection through the electrode under a solid rib which exists between the entrance and exit channels. The entrance and exit channels are extended between a common supply manifold and common exhaust manifold or a common inlet header and common outlet header.

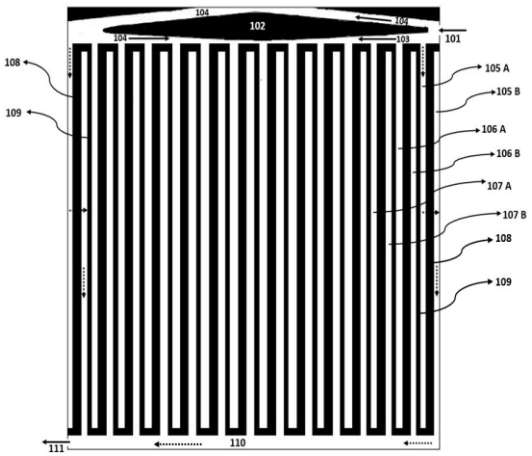

FIG. 2 (ACCOMPANYING ABSTRACT)

APPLICATIONS PUBLISHED UNDER SECTION 27 - cont'd

(12) SG PATENT APPLICATION

(13) A

(43) Publication Date: 31/01/2024

(21) Application No: 10202301735U

(71) Applicant(s): GEORG FISCHER ROHRLEITUNGSSYSTEME AG

(22) Date of filing: 19/06/2023

(72) Inventor(s): Dirk Petry; Markus Breyer

(30) Priority Data:
22 180 897.5
24/06/2022
EP

(74) Agent(s): DREW & NAPIER LLC

(51) International Patent Classification:

(54) Title of Invention: WELDABLE HALF-SHELLS

(57) Abstract:

Fitting for connecting a secondary plastic pipeline of a double pipe system containing two half-shells composed of plastic, wherein in each case each of the half-shells has an integrated heating wire, wherein the heating wire is arranged in each case in the regions of the connecting pieces and the heating wire has several meandering windings, wherein the heating wire is arranged in each case in a groove provided for this in the half-shell and the connecting elements which connect the two half-shells, characterized in that the fitting has distance elements arranged on the inner circumference of the half-shells for concentric arrangement of the fitting with respect to a primary pipeline.

Figure 1

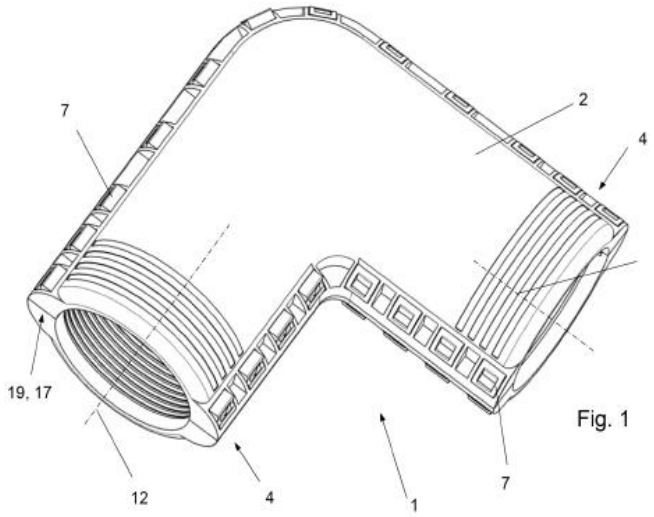

Fig. 1

APPLICATIONS PUBLISHED UNDER SECTION 27 - cont'd

(12) SG PATENT APPLICATION (13) A (43) Publication Date: 31/01/2024 (21) Application No: 10202301740V (71) Applicant(s): Afton Chemical Corporation (22) Date of filing: 19/06/2023 (72) Inventor(s): BAKER, John Marshall (30) Priority Data: 17/844315 20/06/2022 US (74) Agent(s): SPRUSON & FERGUSON (ASIA) PTE. LTD. (51) International Patent Classification:	(54) Title of Invention: Phosphorus Antiwear System For Improved Gear Protection (57) Abstract: A lubricating composition for a transmission or gearbox including a mixture of products providing phosphorus to the fluids effective to achieve good adhesive wear and abrasive wear. [No Available Figure]

APPLICATIONS PUBLISHED UNDER SECTION 27 - cont'd

(12) SG PATENT APPLICATION

(13) A

(43) Publication Date: 31/01/2024

(21) Application No: 10202301771Y

(22) Date of filing: 21/06/2023

(30) Priority Data:
2022-106350
30/06/2022
JP

(51) International Patent Classification:

(71) Applicant(s): DISCO CORPORATION

(72) Inventor(s): Taro ARAKAWA

(74) Agent(s): MIRANDAH ASIA (SINGAPORE) PTE LTD

(54) Title of Invention: CHIP FABRICATION METHOD

(57) Abstract:

Disclosed is a chip fabrication method for fabricating chips by dividing a wafer having a film formed on a reverse surface thereof, along planned division lines into individual chips, the method including a laser beam irradiation step of irradiating the wafer with a laser beam along the planned division lines set on the wafer, to form ablation marks in the film formed on the reverse surface and to form modified regions inside the wafer, and a division step of applying an external force to the wafer after the laser beam irradiation step has been carried out, to divide the wafer along the ablation marks formed in the laser beam irradiation step.

[FIG. 3]

FIG.3

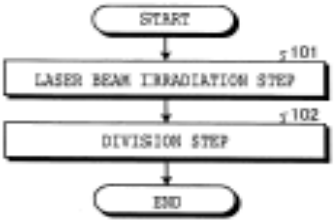

APPLICATIONS PUBLISHED UNDER SECTION 27 - cont'd

(12) SG PATENT APPLICATION

(13) A

(43) Publication Date: 31/01/2024

(21) Application No: 10202301772T

(71) Applicant(s): KOKUSAI ELECTRIC CORPORATION

(22) Date of filing: 21/06/2023

(72) Inventor(s): YAMAMOTO, Kazuyoshi; HAYASHIHARA, Hidemoto; YASHIKI, Kayoko; KITA, Kyohei; ASAI, Kazuhide

(30) Priority Data:
2022-106151
30/06/2022
JP

(74) Agent(s): Allen & Gledhill LLP

(51) International Patent Classification:

(54) Title of Invention: SUBSTRATE PROCESSING SYSTEM, SUBSTRATE PROCESSING APPARATUS, METHOD OF MANUFACTURING SEMICONDUCTOR DEVICE, AND PROGRAM

(57) Abstract:

There is provided a technique, which includes: at least one substrate processing apparatus including a controller configured to be capable of controlling processing of a substrate according to a recipe including at least one step and a first memory configured to be capable of storing data of the at least one substrate processing apparatus that is reported during the processing of the substrate; and a data manager connected to the at least one substrate processing apparatus, configured to acquire the data, and configured to be capable of specifying the number of the at least one step that is included in the data to be acquired such that the data falls within a predefined data acquirable range.

Fig. 5

FIG. 5

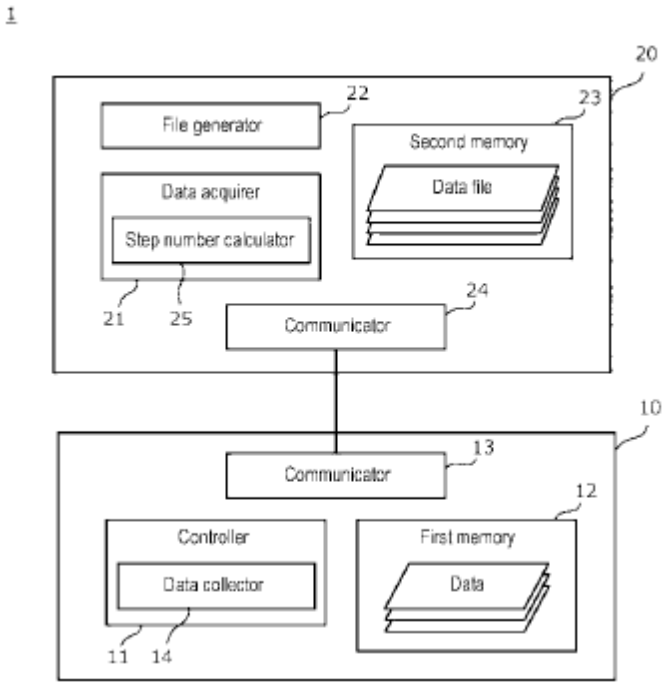

APPLICATIONS PUBLISHED UNDER SECTION 27 - cont'd

(12) SG PATENT APPLICATION

(13) A

(43) Publication Date: 31/01/2024

(21) Application No: 10202301781U

(71) Applicant(s): APPEX NETWORKS PTE. LTD.

(22) Date of filing: 21/06/2023

(72) Inventor(s): Yongdong WANG; Guibin HUA; Hao ZHUANG; Yunpeng CHEN

(30) Priority Data:
CN202210708083.4
22/06/2022
CN

(74) Agent(s): VIERING, JENTSCHURA & PARTNER LLP

(51) International Patent Classification:

(54) Title of Invention: TOKEN MANAGEMENT AND INFORMATION FORWARDING METHODS AND APPARATUSES, DEVICE, AND STORAGE MEDIUM

(57) Abstract:

The present disclosure provides token management and information forwarding methods and apparatuses, an electronic device, and a storage medium, and relates to the field of network communication. According to the present disclosure, a token scheduling module is used to analyze token data corresponding to respective autonomous token objects, to obtain a comprehensive token supply and demand state; and a reward token is allocated to at least one autonomous token object according to the comprehensive token supply and demand state and the token data corresponding to the respective autonomous token objects. Herein, at least part of the autonomous token objects is used to produce and consume tokens. The token scheduling module uniformly schedules the reward tokens for the respective autonomous token objects, which can overcome the defect of performance degradation caused by accessing a public token bucket in a cross-core way by the autonomous token objects, when they have token requirements in a multi-core scenario, thereby improving the token allocation efficiency. In addition, the autonomous token object in the present disclosure may produce tokens, and is provided with a token bucket for storing the tokens, so that the problem of CPU cache conflict caused by multi-core access to the public token bucket can be effectively solved.

FIG. 1

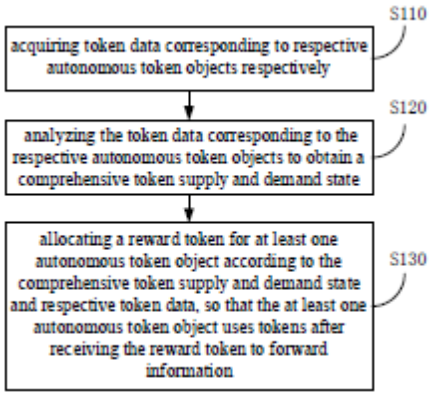

FIG. 1

APPLICATIONS PUBLISHED UNDER SECTION 27 - cont'd

(12) SG PATENT APPLICATION

(13) A

(43) Publication Date: 31/01/2024

(21) Application No: 10202301782X

(71) Applicant(s): APPEX NETWORKS PTE. LTD.

(22) Date of filing: 21/06/2023

(72) Inventor(s): Yongdong WANG; Guibin HUA; Yunpeng CHEN

(30) Priority Data:
202210708218.7
22/06/2022
CN

(74) Agent(s): VIERING, JENTSCHURA & PARTNER LLP

(51) International Patent Classification:

(54) Title of Invention: TOKEN MANAGEMENT AND INFORMATION SENDING METHODS AND APPARATUSES, ELECTRONIC DEVICE, AND STORAGE MEDIUM

(57) Abstract:

The present disclosure provides token management and information sending methods and apparatuses, an electronic device, and a storage medium, and refers to the field of network communication. In the present disclosure, a preset queue is provided in a first token proxy module. The queue includes multiple nodes, one of the multiple nodes is used to store the total number of surplus tokens corresponding to a statistical period, and the total number of surplus tokens is a sum of the number of surplus tokens reported by at least one second token proxy module in the corresponding statistical period. When the second token proxy module sends token demand information to the first token proxy module, the first token proxy module schedules tokens for the second token proxy module from the total surplus tokens, effectively achieving multi-machine load balancing, improving the fairness and efficiency of token allocation, thereby helping to improve the efficiency of information sending.

FIG. 1

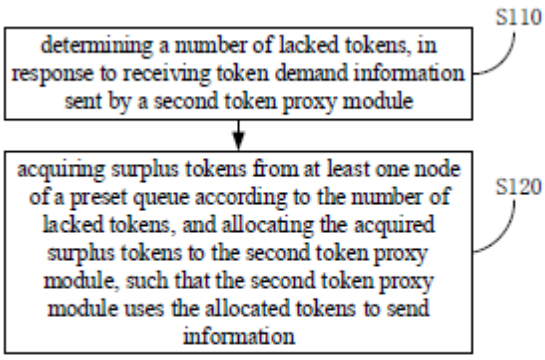

FIG. 1

APPLICATIONS PUBLISHED UNDER SECTION 27 - cont'd

(12) SG PATENT APPLICATION

(13) A

(43) Publication Date: 31/01/2024

(21) Application No: 10202301790P

(71) Applicant(s): ABB Schweiz AG

(22) Date of filing: 22/06/2023

(72) Inventor(s): Michael LUNDH;Jonas LINDER;Hamid FEYZMAHDAVIAN

(30) Priority Data:
22182300.8
30/06/2022
EP

(74) Agent(s): MARKS & CLERK SINGAPORE LLP

(51) International Patent Classification:

(54) Title of Invention: A MOTION CONTROL SYSTEM AND CONTROLLERS FOR A MARINE VESSEL

(57) Abstract:

A high-level motion controller (200) provides a lower-level thrust allocation (TA) (202) with generalized forces demanded on the ship (10) for the current instant of time as well as a prediction of future generalized forces $\{\hat{\tau}_D\}_{t=0}^{T}$ demanded over a predicted future time, and optionally one or more other reference predictions, such as a time-varying velocity and position of the ship $\{\hat{\eta}_D, \hat{\nu}_D\}_{t=0}^{T}$. When predictions of the future desired forces and torque are made available to the lower-level thrust allocation, the lower-level thrust allocation will be aware of what is needed in the future and use the predictions to make efficient changes towards the desired future references, when it generates control signals (**u**) to thrusters available in the thruster system (100) to distribute the desired generalized forces into individual forces of the individual thrusters.

(Figure 2A)

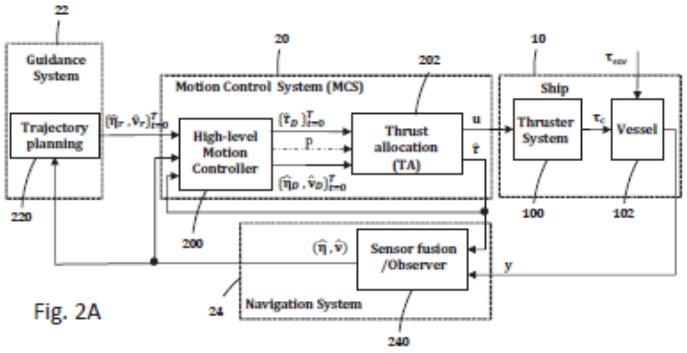

Fig. 2A

APPLICATIONS PUBLISHED UNDER SECTION 27 - cont'd

(12) SG PATENT APPLICATION

(13) A

(43) Publication Date: 31/01/2024

(21) Application No: 10202301794U

(71) Applicant(s): APPEX NETWORKS PTE. LTD.

(22) Date of filing: 22/06/2023

(72) Inventor(s): WANG Yongdong;HUA Guibin;CAO Zhenli;HUANG Shengbo

(30) Priority Data:
202210715959.8
23/06/2022
CN

(74) Agent(s): MARKS & CLERK SINGAPORE LLP

(51) International Patent Classification:

(54) Title of Invention: METHOD, APPARATUS AND SYSTEM FOR SENDING AND RECEIVING DATE MESSAGES BY MULTIPLE SENDING AND SELECTIVELY RECEIVING

(57) Abstract:

This disclosure relates to the technical field of communication, in particular to a method, an apparatus and a system for sending and receiving data message by multiple sending and selectively receiving. The method includes: acquiring a data message to be sent; adding an identification field to each of the data messages, and the identification field includes a feature code of the data messages and a sequence number in a de-duplication array; replicating the data messages at least once to obtain at least one copy of the data messages; and sending the data messages and the copies of the data messages sent respectively via different links. In the embodiments of this disclosure, the memory consumed by caching the data messages at the receiving end in the de-duplication step is saved in the multiple sending and selectively receiving scheme.

The figure of Abstract is Fig. 2

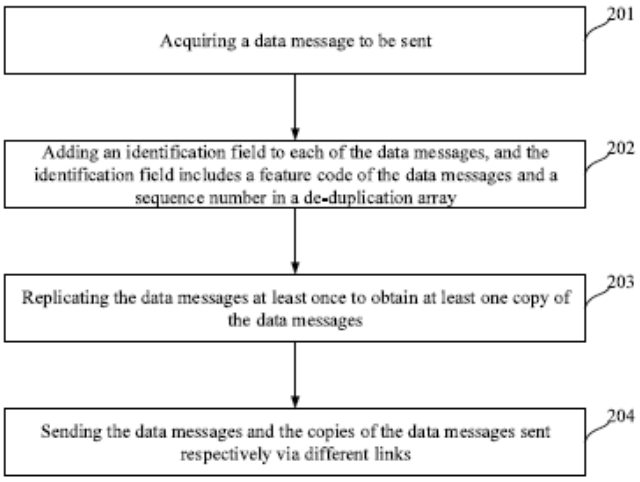

FIG. 2

APPLICATIONS PUBLISHED UNDER SECTION 27 - cont'd

(12) SG PATENT APPLICATION

(13) A

(43) Publication Date: 31/01/2024

(21) Application No: 10202301798T

(71) Applicant(s): SK enpulse Co., Ltd.

(22) Date of filing: 22/06/2023

(72) Inventor(s): LEE, GeonGon; LEE, Hyung-joo; KIM, Suhyeon; SON, Sung Hoon; KIM, Seong Yoon; JEONG, Min Gyo; KIM, Taewan; SHIN, Inkyun; KIM, Tae Young

(30) Priority Data:
10-2022-0076792
23/06/2022
KR

(74) Agent(s): VIERING, JENTSCHURA & PARTNER LLP

(51) International Patent Classification:

(54) Title of Invention: BLANK MASK AND PHOTOMASK USING THE SAME

(57) Abstract:

A blank mask includes a light transmissive substrate, and a light-blocking layer, disposed on the light transmissive substrate, comprising a transition metal and either one or both of oxygen and nitrogen. An average value of grain sizes of a surface of the light-blocking layer ranges from 14 nm to 24 nm.

FIG. 1

FIG. 1



APPLICATIONS PUBLISHED UNDER SECTION 27 - cont'd

(12) SG PATENT APPLICATION (13) A (43) Publication Date: 31/01/2024 (21) Application No: 10202301799R (71) Applicant(s): Nanyang Technological University (22) Date of filing: 22/06/2023 (72) Inventor(s): LIU Zheng; GUO Shasha (30) Priority Data: 10202250255A 22/06/2022 SG (74) Agent(s): VIERING, JENTSCHURA & PARTNER LLP (51) International Patent Classification:	(54) Title of Invention: HYDROGEN SPILLOVER BOOSTED PLATINUM/CARBON ELECTROCATALYSTS (57) Abstract: Herein disclosed is an electrocatalyst comprising: a carbon support; a catalyst disposed on the carbon support, wherein the catalyst comprises platinum; and an interface layer disposed between and in contact with the carbon support and the catalyst, wherein the interface layer renders hydrogen atom chemisorbed on the catalyst to migrate to the carbon support and have the hydrogen atom released from the carbon support as hydrogen gas. Also, herein disclosed are a microcell device comprising the electrocatalyst and a method of forming the electrocatalyst. No suitable figure to be published with abstract

APPLICATIONS PUBLISHED UNDER SECTION 27 - cont'd

(12) SG PATENT APPLICATION

(13) A

(43) Publication Date: 31/01/2024

(21) Application No: 10202301810R

(71) Applicant(s): KANT OPTICAL PTE LTD.

(22) Date of filing: 23/06/2023

(72) Inventor(s): CHI-CHOU YUAN

(30) Priority Data:
111123913
27/06/2022
TW

(74) Agent(s): VIERING, JENTSCHURA & PARTNER LLP

(51) International Patent Classification:

(54) Title of Invention: METHOD OF ENABLING CONTACT LENS TO RELEASE FAR-INFRARED RAYS, CONTACT LENS CONTAINER AND CONTACT LENS

(57) Abstract:

A method of enabling a contact lens to release far-infrared rays, a contact lens container and a contact lens are disclosed. The contact lens container has a container body coated with a far-infrared material. A soaking solution is placed in an accommodating space of the container body, and then the contact lens is placed in the soaking solution. The far-infrared material can release far-infrared rays with a wavelength between 4 μm and 14 μm to the accommodating space. After the contact lens absorbs the far-infrared rays and is removed from the accommodating space, the contact lens is able to release the far-infrared rays. The emissivity of the far-infrared rays from the contact lens is between 0.70 and 0.91. When the user wears the contact lens capable of releasing far-infrared rays, the contact lens attached to the eyeball will improve the health care effect of the eye and reduce the complexity of the manufacturing process and structure.

Fig. 2

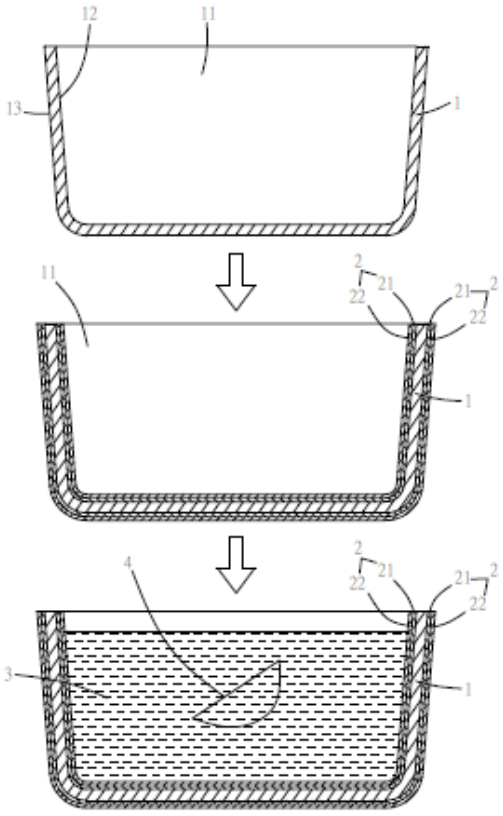

FIG. 2

APPLICATIONS PUBLISHED UNDER SECTION 27 - cont'd

(12) SG PATENT APPLICATION

(13) A

(43) Publication Date: 31/01/2024

(21) Application No: 10202301836Y

(71) Applicant(s): Toshiba Elevator Kabushiki Kaisha

(22) Date of filing: 27/06/2023

(72) Inventor(s): OKANO, Makoto

(30) Priority Data:
2022-106902
01/07/2022
JP

(74) Agent(s): SPRUSON & FERGUSON (ASIA) PTE. LTD.

(51) International Patent Classification:

(54) Title of Invention: Structure For Attaching Front Skirt Of Passenger Conveyor

(57) Abstract:

A front skirt 26 that is arranged between a lower portion of a semi-circular end portion 38 of a balustrade 20 and an upper portion of a truss 12 is formed by a front skirt member 56. The front skirt member 56 is attached to an attachment member 48, which is provided to the upper portion of the truss 12, in a freely detachable manner.

FIG. 1

FIG.1

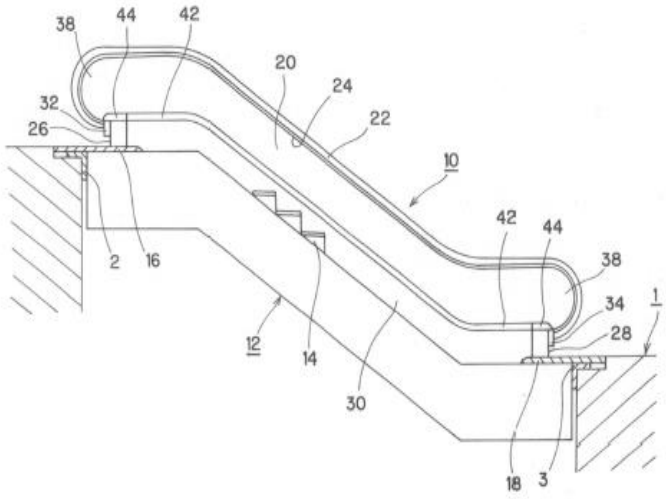

APPLICATIONS PUBLISHED UNDER SECTION 27 - cont'd

(12) SG PATENT APPLICATION

(13) A

(43) Publication Date: 31/01/2024

(21) Application No: 10202301838X

(71) Applicant(s): APPEX NETWORKS PTE. LTD.

(22) Date of filing: 27/06/2023

(72) Inventor(s): Yongdong WANG;Shengbo HUANG;Qing'an ZOU;Zhenli CAO

(30) Priority Data:
202210756724.3
30/06/2022
CN

(74) Agent(s): MARKS & CLERK SINGAPORE LLP

(51) International Patent Classification:

(54) Title of Invention: METHOD AND SYSTEM FOR DISTRIBUTED MANAGEMENT AND CONTROL

(57) Abstract:

The present disclosure relates to the technical field of communications, and particularly to a method and system for distributed management and control. The method includes: performing, by a plurality of controllers, consensus verification on a management and control range of each controller using a first consensus algorithm based on a trigger mechanism to obtain a first management and control range of each controller, and the first management and control range includes a plurality of target network devices connected to the controller; and managing and controlling, by each controller, the plurality of target network devices based on the first management and control range. According to the embodiments of the present disclosure, it prevents the target network devices from being managed and controlled by a plurality of controllers or without any controller. In addition, after a controller changes, a plurality of controllers can still perform consensus verification on the management and control range of each controller using the first consensus algorithm, and then obtain the first management and control range of each controller again, thereby ensuring that the connected target network devices can still be managed and controlled by an assigned controller.

The figure of Abstract is Fig. 2

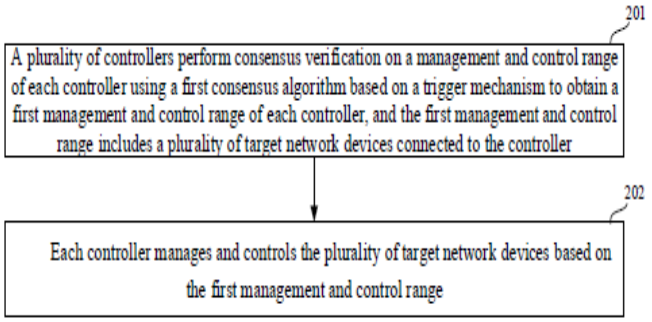

FIG. 2

APPLICATIONS PUBLISHED UNDER SECTION 27 - cont'd

(12) SG PATENT APPLICATION

(13) A

(43) Publication Date: 31/01/2024

(21) Application No: 10202301865W

(71) Applicant(s): Alipay (Hangzhou) Information Technology Co., Ltd.

(22) Date of filing: 30/06/2023

(72) Inventor(s): MEI Xiaofeng; ZHANG Yao; ZHAO Junping

(30) Priority Data: 202210748218.X 29/06/2022 CN

(74) Agent(s): SPRUSON & FERGUSON (ASIA) PTE. LTD.

(51) International Patent Classification:

(54) Title of Invention: METHODS, SYSTEMS, AND NON-TRANSITORY STORAGE MEDIA FOR GRAPHICS MEMORY ALLOCATION

(57) Abstract:

Methods, systems, and non-transitory storage media for graphics memory allocation provided in this specification are used to allocate graphics memories to multiple serial sub-tasks. Target data generated by each serial sub-task are labeled so that the target data are classified into first data that are not used by a subsequent sub-task and second data that can be used by a subsequent sub-task, and the first data of multiple sub-tasks share a same target physical memory address, thereby reducing graphics memory consumption.

Figure 4

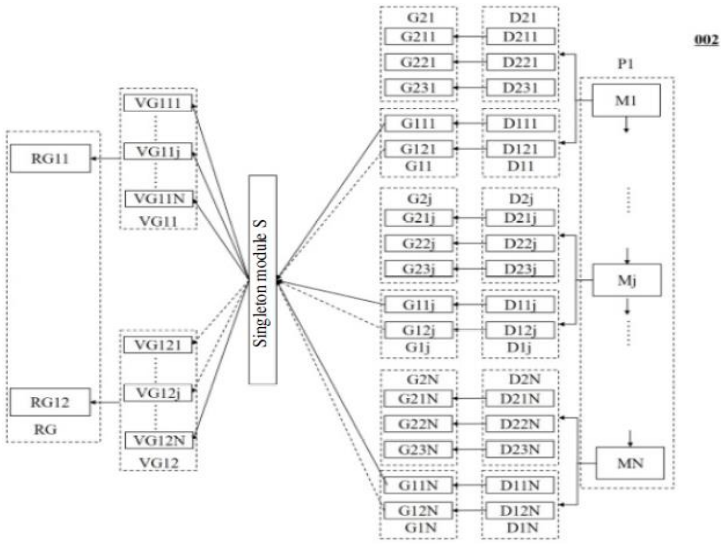

FIG. 4

APPLICATIONS PUBLISHED UNDER SECTION 27 - cont'd

(12) SG PATENT APPLICATION

(13) A

(43) Publication Date: 31/01/2024

(21) Application No: 10202301867S

(71) Applicant(s): ALIPAY (HANGZHOU) INFORMATION TECHNOLOGY CO., LTD.

(22) Date of filing: 30/06/2023

(72) Inventor(s): ZHU, Dingyuan; WANG, Daixin; ZHANG, Zhiqiang; ZHOU, Jun

(30) Priority Data:
202210756065.3
29/06/2022
CN

(74) Agent(s): SPRUSON & FERGUSON (ASIA) PTE. LTD.

(51) International Patent Classification:

(54) Title of Invention: METHODS AND APPARATUSES FOR TRAINING USER CLASSIFICATION MODEL AND USER CLASSIFICATION PROCESSING METHODS AND APPARATUSES

(57) Abstract:

Embodiments of the present specification provide methods and apparatuses for training a user classification model and user classification processing methods and apparatuses. The user classification model includes a graph neural network, a first classification network, and a second classification network. The method for training a user classification model includes: obtaining a sample user, where the sample user has tag data; in a user relationship network graph, using the sample user as a target node, and performing aggregation on the target node by using the graph neural network; inputting the obtained user representation into the first classification network and the second classification network to obtain a first predicted value and a second predicted value, where the first predicted value represents a probability that the sample user belongs to a first user group formed by a first-type user and a second-type user, and the second predicted value represents a probability that the sample user belongs to a second user group formed by the second-type user and a third-type user; determining a current loss value based on the first predicted value and/or the second predicted value, and the tag data; and adjusting a parameter of the user classification model with a goal of minimizing the current loss value.

(FIG. 2)

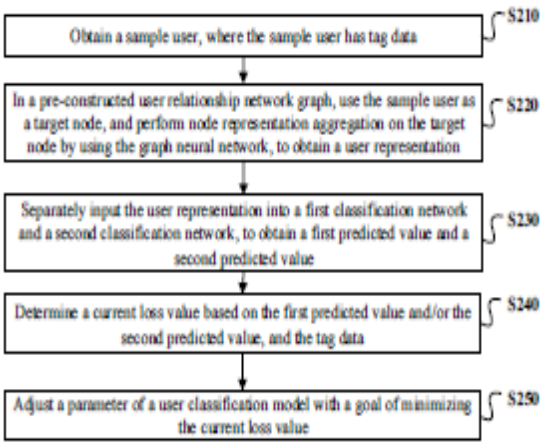

FIG. 2

APPLICATIONS PUBLISHED UNDER SECTION 27 - cont'd

(12) SG PATENT APPLICATION

(13) A

(43) Publication Date: 31/01/2024

(21) Application No: 10202301869Y

(71) Applicant(s): Bruker Switzerland AG

(22) Date of filing: 30/06/2023

(72) Inventor(s): Urs STEINER; Felician MUNTEAN

(30) Priority Data:
17/854,940
30/06/2022
US

(74) Agent(s): VIERING, JENTSCHURA & PARTNER LLP

(51) International Patent Classification:

(54) Title of Invention: GAS RETAINING ION GUIDE WITH AXIAL ACCELERATION

(57) Abstract:

A gas retaining ion guide has RF electrodes distributed about an ion region that provide an RF confinement field for ions therein. DC electrodes are also provided that extend from an entrance of the ion guide to an exit, and provide a DC electric field. The DC electrodes are further from the central axis than the RF electrodes, and each provides a gas seal between two adjacent RF electrodes. Conductive surfaces of the DC electrodes establish the DC electric field through gaps between adjacent RF electrodes, and the conductive surfaces have a distance from the central axis that changes over the length of the ion guide so as to provide an axial DC field component. The size of the DC electrode conductive surfaces and a width of the gaps between RF electrodes may be selected to ensure that ions escaping confinement through the gaps are discharged on the conductive surfaces.

Fig. 3

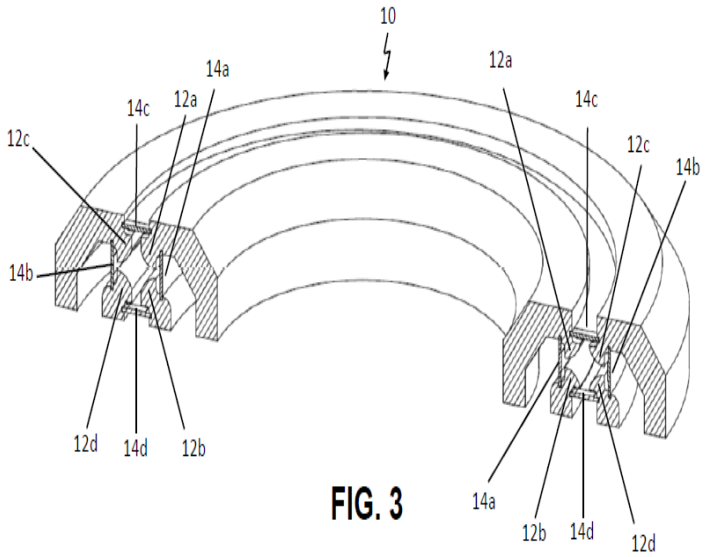

FIG. 3

APPLICATIONS PUBLISHED UNDER SECTION 27 - cont'd

(12) SG PATENT APPLICATION

(13) A

(43) Publication Date: 31/01/2024

(21) Application No: 10202301871S

(71) Applicant(s): MAX CO., LTD.

(22) Date of filing: 30/06/2023

(72) Inventor(s): Akira KASAHARA;Kenichi ARAI;Shigeki SHINDOU

(30) Priority Data:
2022-106761
01/07/2022
JP

(74) Agent(s): DREW & NAPIER LLC

(51) International Patent Classification:

(54) Title of Invention: BINDING DEVICE

(57) Abstract:

A binding device includes a binding mechanism configured to feed a wire around a reinforcing bar, and to twist and bind the wire fed around the reinforcing bar, a binding mechanism moving part configured to move the binding mechanism between a binding position where binding of the reinforcing bar is performed and a retreat position distant from the reinforcing bar, and a wire pull-out part configured to pull out the wire wound on the reel. The wire pull-out part includes a transmission part to which an operation of the binding mechanism moving part is transmitted, and the transmission part is configured such that an amount of the wire pulled out by the wire pull-out part is different from an amount of movement of the binding mechanism moved by an operation of the binding mechanism moving part.

Figure 1A

FIG. 1A

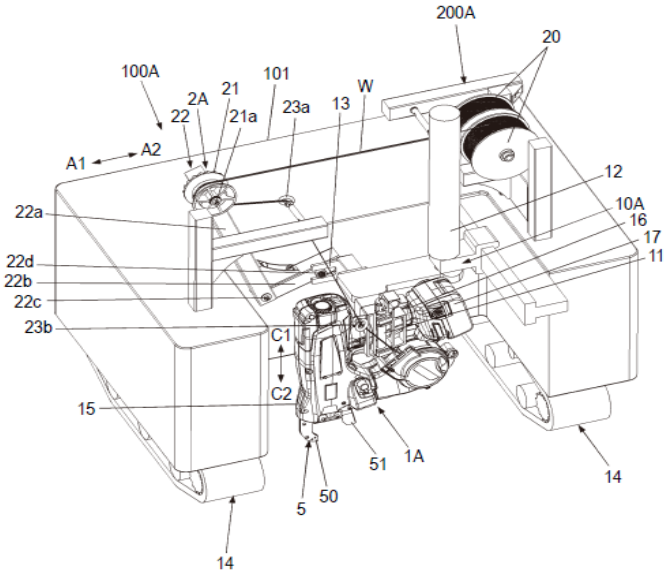

APPLICATIONS PUBLISHED UNDER SECTION 27 - cont'd

(12) SG PATENT APPLICATION

(13) A

(43) Publication Date: 31/01/2024

(21) Application No: 10202301872Q

(71) Applicant(s): MAX CO., LTD.

(22) Date of filing: 30/06/2023

(72) Inventor(s): Akira KASAHARA;Shigeki SHINDOU;Yosei NODAGUCHI

(30) Priority Data:
2022-106763
01/07/2022
JP

(74) Agent(s): DREW & NAPIER LLC

(51) International Patent Classification:

(54) Title of Invention: BINDING DEVICE

(57) Abstract:

A binding device includes a main body part and a traveling part configured to travel the main body part. The main body part includes a binding mechanism configured to feed a plurality of wires around a reinforcing bar, and to twist and bind the plurality of wires fed around the reinforcing bar, a binding mechanism moving part configured to move the binding mechanism between a binding position where binding of the reinforcing bar is performed and a retreat position away from the reinforcing bar, a reel accommodation part configured to accommodate a plurality of reels on each of which one wire is wound, and a path induction part configured to form a feeding path of wires pulled out from the plurality of reels accommodated in the reel accommodation part between the binding mechanism and the reel accommodation part.

Figure 1A

FIG. 1A

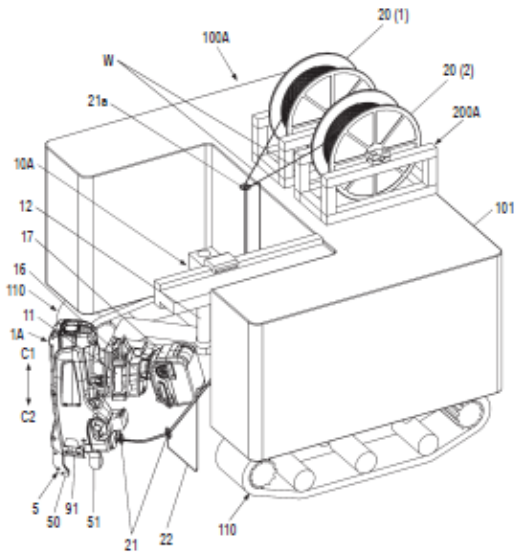

APPLICATIONS PUBLISHED UNDER SECTION 27 - cont'd

(12) SG PATENT APPLICATION

(13) A

(43) Publication Date: 31/01/2024

(21) Application No: 10202302002T

(22) Date of filing: 13/07/2023

(71) Applicant(s): HELIOS SCIENTIFIC PTE. LTD.

(72) Inventor(s): Cheah Han Chen; Cheah Han Liang; Sew Chee Kang; Cheah Han Ming; Phoon Kok Fai; Soon Guan Lip; Wong Choon Kang; Cheah Kar Hong

(30) Priority Data:

(74) Agent(s): PINTAS-IPHOUSE PTE. LTD.

(51) International Patent Classification:

(54) Title of Invention: A SYSTEM AND METHOD FOR AUTHORIZING PAYMENTS OF A TRANSPORT COMPANY

(57) Abstract:

The present invention discloses a system (100) for authorizing payments of at least one transport company (140a to 140n) towards products and/or services comprising: an identity retrieval device (110) arranged at a kiosk or counter to receive an identity information related to an employee of the at least one transport company (140a to 140n) and to convert the received identity information into a triggering token for transmission to a server (120); and, the server (120) comprising: a personal identity validation module (121) configured to: process the triggering token to retrieve the identity information of the employee upon receiving the triggering token; retrieve a roster duty and attendance information of the employee from a database (141a to 141n) of the respective transport company (140a to 140n) based on the retrieved identity information; determine whether the employee is eligible for a purchase of one or more products and/or services based on the retrieved roster duty and attendance information; and, generate and transmit an approval token to the kiosk or counter for authorizing the payments towards the products and/or services in the event of the employee is determined to be eligible.

(The most illustrative figure: Fig. 1)

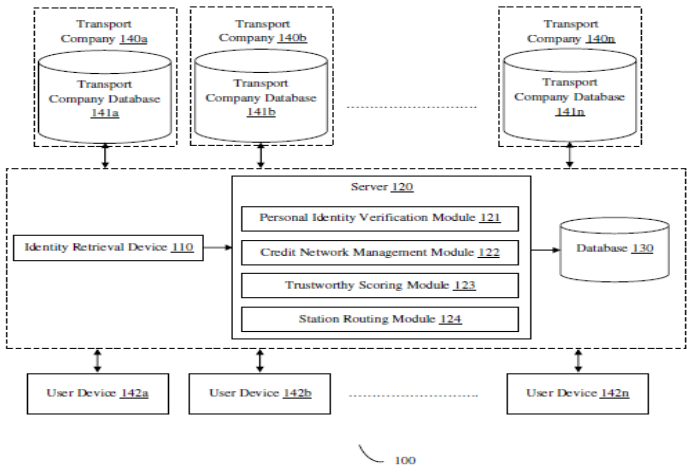

Fig. 1

APPLICATIONS PUBLISHED UNDER SECTION 27 - cont'd

(12) SG PATENT APPLICATION

(13) A

(43) Publication Date: 31/01/2024

(21) Application No: 10202303045T

(71) Applicant(s): LYELL IMMUNOPHARMA, INC.

(22) Date of filing: 28/04/2021

(72) Inventor(s): VODNALA, Suman Kumar; EIL, Robert Langland; RESTIFO, Nicholas P.

(30) Priority Data:
63/016,907
28/04/2020
US

(74) Agent(s): RODYK IP

(51) International Patent Classification:

(54) Title of Invention: METHODS FOR CULTURING CELLS

(57) Abstract:

The preset disclosure provides methods of culturing cells, *e.g.*, pluripotent cells, multipotent cells, and/or immune cells (*e.g.*, T cells, NK cells, and/or TILs) in a medium comprising at least about 5 mM potassium ion, wherein the medium is not hypertonic. In some aspects, the medium is hypotonic. In some aspects, the methods disclosed herein increases the number of less-differentiated cells in the population of cells. In some aspects, the cultured cells are engineered, *e.g.*, to comprise a chimeric antigen receptor or an engineered T cell receptor. In some aspects, the cells are administered to a subject in need thereof.

No accompanying figure

APPLICATIONS PUBLISHED UNDER SECTION 27 - cont'd

(12) SG PATENT APPLICATION

(13) A

(43) Publication Date: 31/01/2024

(21) Application No: 10202303125W

(71) Applicant(s): INTEL CORPORATION

(22) Date of filing: 29/12/2017

(72) Inventor(s): LIFF, Shawna, M.; ELSHERBINI, Adel, A.; SWAN, Johanna, M.

(30) Priority Data:

(74) Agent(s): Amica Law LLC

(51) International Patent Classification:

(54) Title of Invention: MICROELECTRONIC ASSEMBLIES

(57) Abstract:

Microelectronic assemblies, and related devices and methods, are disclosed herein. For example, in some embodiments, a microelectronic assembly may include a first die comprising a first face and a second face; and a second die, the second die comprising a first face and a second face, wherein the second die further comprises a plurality of first conductive contacts at the first face and a plurality of second conductive contacts at the second face, and the second die is between first-level interconnect contacts of the microelectronic assembly and the first die.

FIG. 1

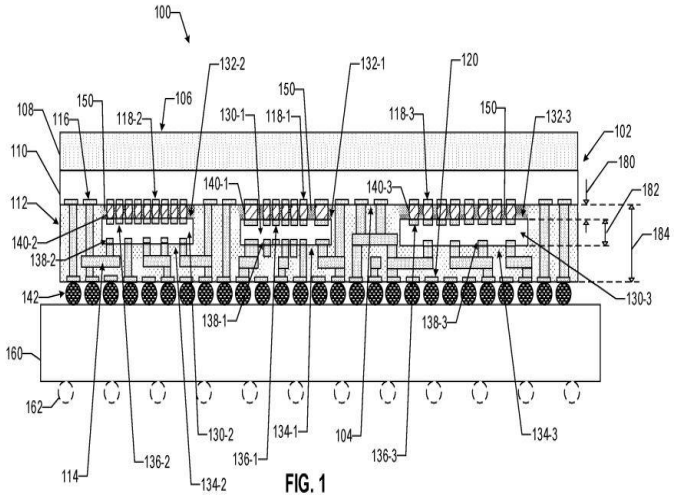

FIG. 1

APPLICATIONS PUBLISHED UNDER SECTION 27 - cont'd

(12) SG PATENT APPLICATION

(13) A

(43) Publication Date: 31/01/2024

(21) Application No: 10202303177W

(71) Applicant(s): PRAXAIR S.T. TECHNOLOGY, INC.

(22) Date of filing: 09/05/2019

(72) Inventor(s): BELOV, Irina; TANG, Zhihong; FITZWATER, Brian; COPELAND, Daryl

(30) Priority Data:
16/406,292
08/05/2019
US

(74) Agent(s): SPRUSON & FERGUSON (ASIA) PTE. LTD.

(51) International Patent Classification:

(54) Title of Invention: CHROMATE-FREE CERAMIC COATING COMPOSITIONS FOR HOT CORROSION PROTECTION OF SUPERALLOY SUBSTRATES

(57) Abstract:

Hexavalent chromium-free slurry formulations which are suitable in the production of ceramic overlay coating systems are described. The formulations provide superior hot corrosion and heat oxidation protection for superalloy substrates. A basecoat slurry and topcoat slurry are provided. The basecoat slurry includes an aluminum phosphate based aqueous solution having a molar ratio of Al:PO_4 higher than about 1:3 with the incorporation of metal oxide particles. The topcoat slurry includes an aluminum phosphate based aqueous solution having a molar ratio of Al:PO_4 higher than about 1:3. Both of the basecoat slurry and the topcoat slurry are hexavalent chromium-free.

[Fig.8]

Fig. 8 Thermal Cycling Test in the presence of Mixture A deposit of corrosive sulfates at 1310°F(710°C): Bare substrates vs. substrates coated with the Coating System of the invention

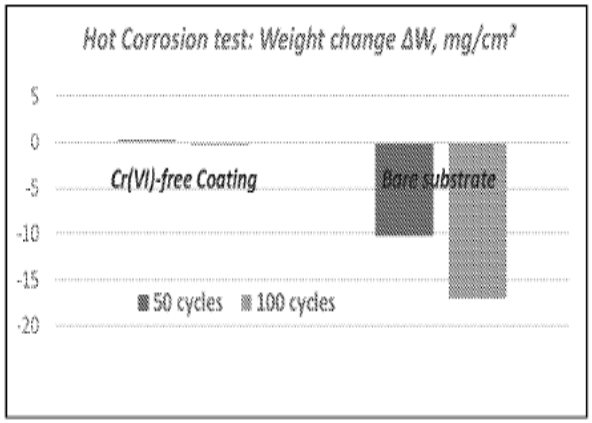

APPLICATIONS PUBLISHED UNDER SECTION 27 - cont'd

(12) SG PATENT APPLICATION (13) A (43) Publication Date: 31/01/2024 (21) Application No: 10202303201P (71) Applicant(s): CELULARITY, INC. (22) Date of filing: 16/11/2018 (72) Inventor(s): YE, Qian (30) Priority Data: 62/587,335 16/11/2017 US (74) Agent(s): MIRANDAH ASIA (SINGAPORE) PTE LTD (51) International Patent Classification:	(54) Title of Invention: CULTIVATION OF PLACENTA TO ISOLATE EXOSOMES (57) Abstract: Several approaches to produce, isolate, and characterize exosomes recovered from a cultivated placenta or a portion thereof are provided. The alternatives described herein facilitate the production, isolation, and characterization of exosomes, which can be used as biotechnological tools and therapeutics. Also provided herein are populations of exosomes derived from placenta organ culture or culture of portions of the placenta. Also provided are compositions comprising the populatons of exosomes and methods of their use for the treatment of subjects. [No figure]

APPLICATIONS PUBLISHED UNDER SECTION 27 - cont'd

(12) SG PATENT APPLICATION

(13) A

(43) Publication Date: 31/01/2024

(21) Application No: 10202303204Q

(71) Applicant(s): BECTON, DICKINSON AND COMPANY

(22) Date of filing: 19/09/2019

(72) Inventor(s): HU, Olivia; SONDEREGGER, Ralph L.; STALEY, Shaun

(30) Priority Data:
62/741,382
04/10/2018
US

16/573,709
17/09/2019
US

(74) Agent(s): DREW & NAPIER LLC

(51) International Patent Classification:

(54) Title of Invention: PINCH CLAMP

(57) Abstract:

Pinch clamps are provided which generate positive displacement while also preventing rebound. To prevent rebound while providing positive displacement, the upper and lower clamping surfaces may be configured to form a pinch profile along which the tubing is compressed with the pinch point being formed at the distal end of the pinch profile. To further prevent rebound, the lower arm of the pinch clamp can include blocking ribs that interface with the upper clamping surface to prevent distal travelling of the pinch point even if the upper arm is forced into an over-engaged position.

Figure 1

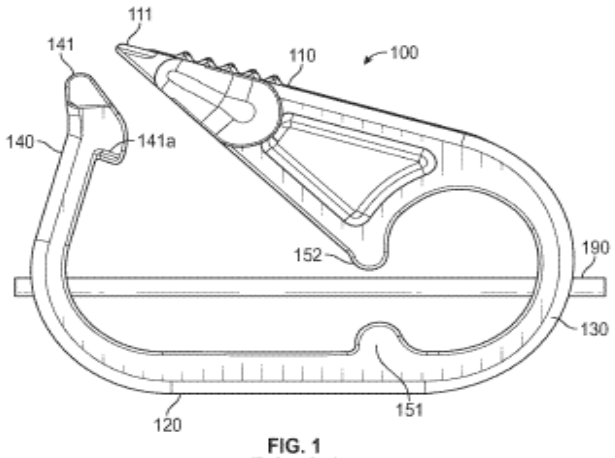

FIG. 1
(Prior Art)

APPLICATIONS PUBLISHED UNDER SECTION 27 - cont'd

(12) SG PATENT APPLICATION

(13) A

(43) Publication Date: 31/01/2024

(21) Application No: 10202303212T

(71) Applicant(s): ORION CORPORATION

(22) Date of filing: 21/12/2017

(72) Inventor(s): DIN BELLE, David;MÄKELÄ, Mikko;PASSINIEMI, Mikko;PIETIKÄINEN, Pekka;RUMMAKKO, Petteri;TIAINEN, Eija;VAISMAA, Matti;WOHLFAHRT, Gerd

(30) Priority Data:
20166024
22/12/2016
FI

(74) Agent(s): MARKS & CLERK SINGAPORE LLP

(51) International Patent Classification:

(54) Title of Invention: PYRAN DERVATIVES AS CYP11A1 (CYTOCHROME P450 MONOOXYGENASE 11A1) INHIBITORS

(57) Abstract:

Compounds of formula (I) wherein R_1, R_2,R_3,R_4,R_5,R_{23},R_{24},L, A and Bare as defined in claim 1, or pharmaceutically acceptable salts thereof are disclosed. The compounds of formula (I) possess utility as cytochrome P450 monooxygenase 11A1(CYP11A1) inhibitors. The compounds are useful as medicaments in the treatment of steroidreceptor, particularly androgen receptor,dependent diseases and conditions, such asprostate cancer.

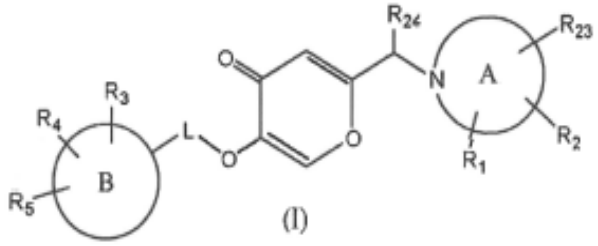

(I)

Figure for publication: None

APPLICATIONS PUBLISHED UNDER SECTION 27 - cont'd

(12) SG PATENT APPLICATION

(13) A

(43) Publication Date: 31/01/2024

(21) Application No: 10202303217P

(71) Applicant(s): LAM RESEARCH CORPORATION

(22) Date of filing: 06/03/2020

(72) Inventor(s): LAVOIE, Adrien; AGARWAL, Pulkit; PASQUALE, Frank Loren; KUMAR, Purushottam

(30) Priority Data:
62/816,820
11/03/2019
US

(74) Agent(s): MARKS & CLERK SINGAPORE LLP

(51) International Patent Classification:

(54) Title of Invention: APPARATUS FOR CLEANING PLASMA CHAMBERS

(57) Abstract:

Systems and methods for cleaning a processing chamber include supplying a pre-activated cleaning gas through a collar surrounding a showerhead stem into the processing chamber to clean the processing chamber. In other embodiments, a cleaning gas is supplied to the collar, and RF power is supplied to the showerhead or to a pedestal to generate plasma in the processing chamber to clean the processing chamber. In still other embodiments, an inert gas is supplied to the collar, a pre-activated cleaning gas is supplied to the showerhead stem, and RF power is supplied to the showerhead or to the pedestal to generate plasma in the processing chamber to clean the processing chamber.

FIG. 1

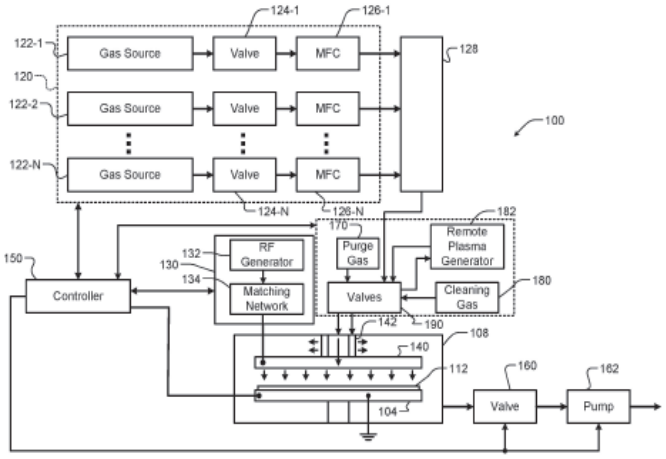

FIG. 1

APPLICATIONS PUBLISHED UNDER SECTION 27 - cont'd

(12) SG PATENT APPLICATION

(13) A

(43) Publication Date: 31/01/2024

(21) Application No: 10202303224R

(71) Applicant(s): REGENERON PHARMACEUTICALS, INC.

(22) Date of filing: 14/10/2016

(72) Inventor(s): CHEN, Hunter;SCHLESINGER, Erica

(30) Priority Data:
62/242,412
16/10/2015
US

(74) Agent(s): MIRANDAH ASIA (SINGAPORE) PTE LTD

(51) International Patent Classification:

(54) Title of Invention: STABLE PROTEIN COMPOSITIONS

(57) Abstract:

Stable pharmaceutical formulations and drug delivery devices are disclosed. In certain embodiments, the drug delivery device contains a reservoir when implanted into a patient is in partial contact with the tissue environment. The reservoir remains in contact with the environment via a porous structure in the housing of the delivery device. The reservoir contains a combination of the therapeutic biomolecule and a second molecule that serves to stabilize and restrict the solubility of the therapeutic biomolecule, thereby controlling the amount of therapeutic biomolecule that is in solution. The concentration of the soluble therapeutic biomolecule or the size of the surface area of the porous structure controls the rate of delivery of the therapeutic biomolecule to the target tissue.

[Figure 9]

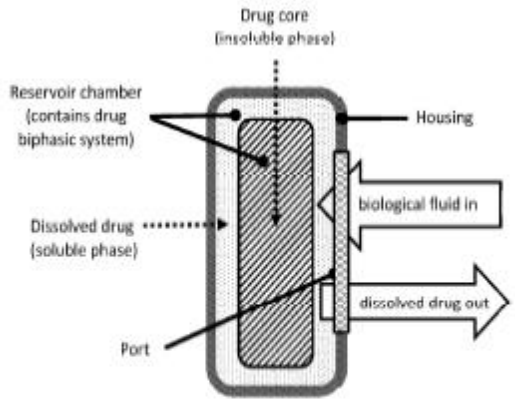

FIGURE 9

APPLICATIONS PUBLISHED UNDER SECTION 27 - cont'd

(12) SG PATENT APPLICATION

(13) A

(43) Publication Date: 31/01/2024

(21) Application No: 10202303229Q

(71) Applicant(s): ANGEL PLAYING CARDS CO., LTD.

(22) Date of filing: 25/10/2018

(72) Inventor(s): SHIGETA Yasushi

(30) Priority Data:
2017-219634
15/11/2017
JP

(74) Agent(s): SPRUSON & FERGUSON (ASIA) PTE. LTD.

(51) International Patent Classification:

(54) Title of Invention: RECOGNITION SYSTEM

(57) Abstract:

A recognition system of a chip in a game parlor having a game table includes a game recording device which records a state of the chips stacked on the game table as an image using a camera and a chip determination device which analyses an image of the state of the recorded chips to determine the number and the type of the chips bet by a player. The chip determination device has a function of storing a characteristic of an image of a predetermined state of the chip, and of outputting and displaying, as a determination result, a fact of an unclear determination when the image obtained from the game recording device at the time of determining is the image of the predetermined state.

Fig. 3

FIG.3

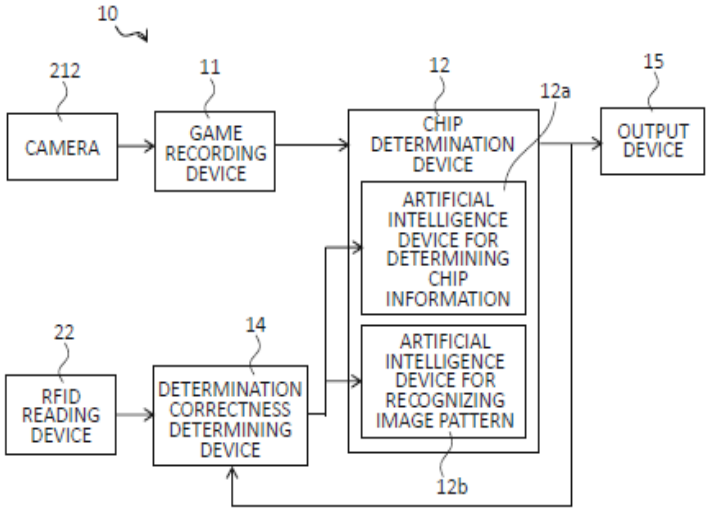

APPLICATIONS PUBLISHED UNDER SECTION 27 - cont'd

(12) SG PATENT APPLICATION

(13) A

(43) Publication Date: 31/01/2024

(21) Application No: 10202303231S

(71) Applicant(s): Angel Playing Cards Co., Ltd.

(22) Date of filing: 15/11/2018

(72) Inventor(s): SHIGETA, Yasushi

(30) Priority Data:
2017-219634
15/11/2017
JP

(74) Agent(s): SPRUSON & FERGUSON (ASIA) PTE. LTD.

(51) International Patent Classification:

(54) Title of Invention: RECOGNITION SYSTEM

(57) Abstract:

A recognition system of a chip in a game parlor having a game table includes a game recording device which records a state of the chips stacked on the game table as an image using a camera and a chip determination device which analyses an image of the state of the recorded chips to determine the number and the type of the chips bet by a player. The chip determination device has a function of storing a characteristic of an image of a predetermined state of the chip, and of outputting and displaying, as a determination result, a fact of an unclear determination when the image obtained from the game recording device at the time of determining is the image of the predetermined state.

Fig. 3

FIG.3

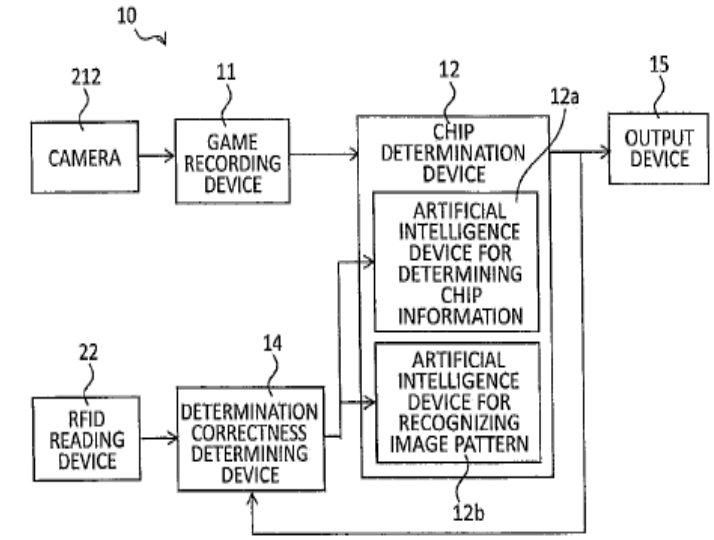

APPLICATIONS PUBLISHED UNDER SECTION 27 - cont'd

(12) SG PATENT APPLICATION

(13) A

(43) Publication Date: 31/01/2024

(21) Application No: 10202303234U

(71) Applicant(s): MICROWAVE PACKAGING (S) PTE LTD

(22) Date of filing: 22/05/2019

(72) Inventor(s): Lau Boon Wee

(30) Priority Data:

(74) Agent(s): ORION IP LLP

(51) International Patent Classification:

(54) Title of Invention: A Food Receptacle

(57) Abstract:

A food receptacle is provided. Food receptacle includes a tray having a base, a base perimeter wall extending therefrom, such that the base perimeter wall extends upwardly from the base, such that the base perimeter wall includes a first side wall, a second side wall opposite the first side wall, a front wall disposed between and connected to the first side wall and the second side wall, such that the front wall forms an obtuse angle with the base and a rear wall opposite the front wall, the rear wall disposed between and connected the first side wall and the second side wall, a lid adapted to cover the tray, the lid includes a top panel having a lid perimeter edge and a lid perimeter wall extending downwardly therefrom, such that the lid perimeter wall includes a first side lid wall, a second side lid wall opposite the first side lid wall, a front lid wall between and connected to the first side wall and the second side wall, such that the front lid wall forms an obtuse angle with the top panel, such that the top panel is pivotally connected to the rear wall, and such that the front wall extends beyond the front lid wall and adapted to receive the front lid wall within the front wall when the lid is covering the tray.

Fig. 1

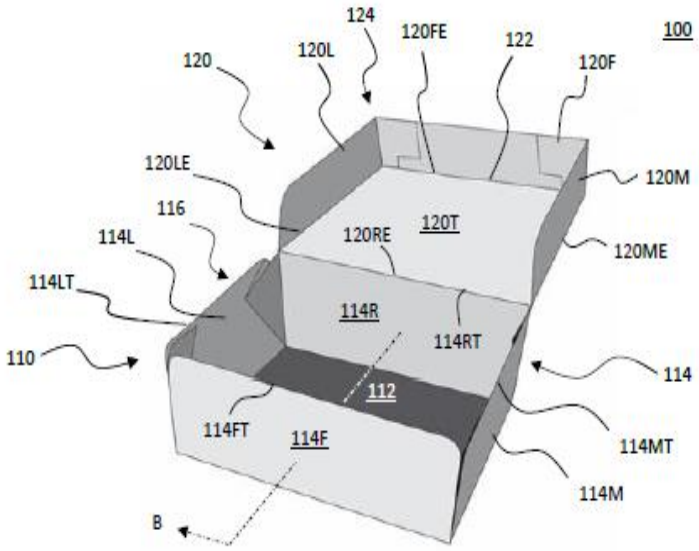

Fig. 1

APPLICATIONS PUBLISHED UNDER SECTION 27 - cont'd

(12) SG PATENT APPLICATION

(13) A

(43) Publication Date: 31/01/2024

(21) Application No: 10202303239R

(22) Date of filing: 20/05/2021

(71) Applicant(s): SPACECRAFT SEVEN, LLC

(72) Inventor(s): SACRAMENTO, Chester Bittencort; HERZOG, Christopher Dean; PRABHAKAR, Raj

(30) Priority Data:
63/027,866
20/05/2020
US

63/027,868
20/05/2020
US

(74) Agent(s): DAVIES COLLISON CAVE ASIA PTE. LTD.

(51) International Patent Classification:

(54) Title of Invention: ENGINEERED PARKIN AND USES THEREOF

(57) Abstract:

Parkin protein variants having activating mutations and/or fused to a mitochondrial targeting sequence are provided. The engineered Parkin may be a fusion protein including a mitochondrial targeting sequence (MTS); a transmembrane domain; and a Parkin protein or functional variant or fragment thereof, such as a Parkin having an N-terminal deletion. The MTS may be the MTS of PINK1 or a functional variant thereof, optionally with a substitution at Phe-104. Alternatively or in addition to the fusion, the engineered Parkin may have one or more activating mutations, such as single amino-acid substitutions. The engineered Parkin may be delivered in a vector, such as an adeno-associated virus (AAV) vector, and may be used to treat a disease or disorder, such as Parkinson's disease or any of various neurodegenerative diseases.

[Figure 16]

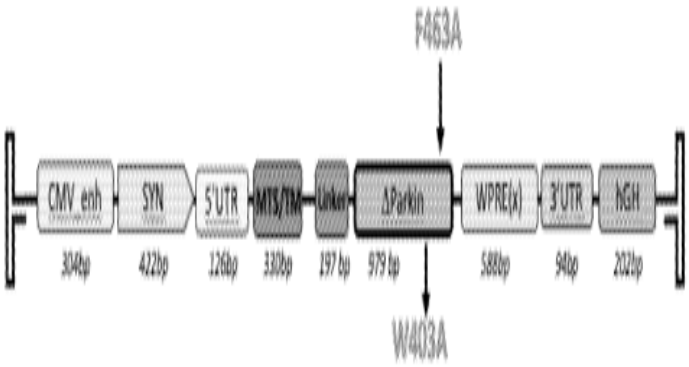

FIG. 16

APPLICATIONS PUBLISHED UNDER SECTION 27 - cont'd

(12) SG PATENT APPLICATION (13) A (43) Publication Date: 31/01/2024 (21) Application No: 10202303249P (71) Applicant(s): REGENERON PHARMACEUTICALS, INC. (22) Date of filing: 05/09/2018 (72) Inventor(s): SKINNER, Andria; KULYBA, Natallia (30) Priority Data: 62/556,153 08/09/2017 US (74) Agent(s): FPA PATENT ATTORNEYS ASIA PTE. LTD. (51) International Patent Classification:	(54) Title of Invention: METHODS OF ASSESSING ANTIBODY-DRUG CONJUGATES (57) Abstract: The present disclosure provides methods of assessing DAR of ADC products that provide advantages over known methods. Specifically, methods of the disclosure can be used in high-throughput applications and/or without having to dilute ADC samples during the assessment. No accompanying figure

APPLICATIONS PUBLISHED UNDER SECTION 27 - cont'd

(12) SG PATENT APPLICATION (13) A (43) Publication Date: 31/01/2024 (21) Application No: 10202303255Q (71) Applicant(s): Gilead Sciences, Inc. (22) Date of filing: 02/03/2016 (72) Inventor(s): Evangelos AKTOUDIANAKIS ; Gregory CHIN;Richard L. MACKMAN;Samuel E. METOBO;Michael R. MISH;Hyung-jung PYUN ;Jeff ZABLOCKI (30) Priority Data: 62/128,397 04/03/2015 US 62/250,403 03/11/2015 US (74) Agent(s): DAVIES COLLISON CAVE ASIA PTE. LTD. (51) International Patent Classification:	(54) Title of Invention: TOLL LIKE RECEPTOR MODULATOR COMPOUNDS (57) Abstract: The present disclosure relates generally to toll like receptor modulator compounds, such as diamino pyrido[3,2 D] pyrimidine compounds and pharmaceutical compositions which, among other things, modulate toll-like receptors (e.g. TLR-8), and methods of making and using them. [No suitable figures to be published]

APPLICATIONS PUBLISHED UNDER SECTION 27 - cont'd

(12) SG PATENT APPLICATION

(13) A

(43) Publication Date: 31/01/2024

(21) Application No: 10202303257R

(71) Applicant(s): HAI ROBOTICS CO., LTD.

(22) Date of filing: 07/09/2018

(72) Inventor(s): CHENG, Jui-chun; XU, Shengdong; CHEN, Yuqi

(30) Priority Data:
201711141498.3
14/11/2017
CN

201711135812.7
14/11/2017
CN

(74) Agent(s): MARKS & CLERK SINGAPORE LLP

(51) International Patent Classification:

(54) Title of Invention: HANDLING ROBOT AND METHOD FOR RETRIEVING INVENTORY ITEM BASED ON HANDLING ROBOT

(57) Abstract:

A method for retrieving an inventory item based on a handling robot, where the handling robot includes: a storage frame; and a material handling device installed on the storage frame, and including a telescopic arm and a manipulator installed to the telescopic arm; and the method for retrieving an inventory item includes: driving, by the telescopic arm, the manipulator to extend to a preset position of warehouse shelf along a preset horizontal reference line; loading, by the manipulator that is remained on the reference line, the inventory item located in the preset position; driving, by the telescopic arm, the manipulator loaded with the inventory item to move to the storage frame along the reference line; and unloading, by the manipulator that is remained on the reference line, the inventory item to the storage frame.

Figure 11

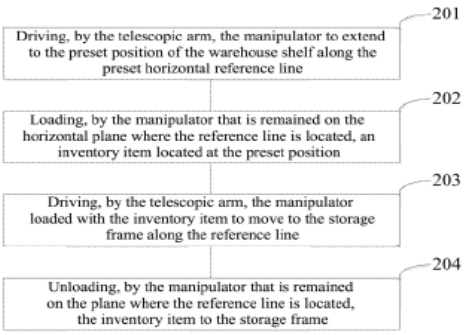

FIG. 11

APPLICATIONS PUBLISHED UNDER SECTION 27 - cont'd

(12) SG PATENT APPLICATION (13) A (43) Publication Date: 31/01/2024 (21) Application No: 10202303260Q (71) Applicant(s): MERUS N.V. (22) Date of filing: 22/09/2017 (72) Inventor(s): GEUIJEN, Cecilia Anna Wilhelmina; THROSBY, Mark; DE KRUIF, Cornelis Adriaan; KLOOSTER, Rinse; TACKEN, Paulus Johannes; LOGTENBERG, Ton (30) Priority Data: 16190499.0 23/09/2016 EP (74) Agent(s): FPA PATENT ATTORNEYS ASIA PTE. LTD. (51) International Patent Classification:	(54) Title of Invention: BINDING MOLECULES THAT MODULATE A BIOLOGICAL ACTIVITY EXPRESSED BY A CELL (57) Abstract: The invention provides means and methods of stimulating activity of a member of the TNF receptor superfamily on a cell. The invention also provides binding molecules such as antibodies that comprises at least two antigen binding sites, wherein a first antigen binding site can bind an extracellular part of said member and a second antigen binding site can bind an extracellular part of a second (different) membrane protein. No accompanying figure

APPLICATIONS PUBLISHED UNDER SECTION 27 - cont'd

(12) SG PATENT APPLICATION

(13) A

(43) Publication Date: 31/01/2024

(21) Application No: 10202303269V

(71) Applicant(s): LI Xiaoyan

(22) Date of filing: 20/11/2023

(72) Inventor(s): LI Xiaoyan

(30) Priority Data:

(74) Agent(s): Amica Law LLC

(51) International Patent Classification:

(54) Title of Invention: A FLEXSPLINE, A HARMONIC GEAR AND A METHOD OF PREPARATION

(57) Abstract:

Described herein is a flexspline comprising at least one sheet of carbon fibre, a plurality of gear teeth arranged along and attached to a surface of the at least one sheet of carbon fibre, and an adhesive resin to attach the at least one sheet of carbon fibre to the plurality of gear teeth, each gear tooth in the plurality of gear teeth comprises carbon fibre filaments and the adhesive resin. The flexspline may be prepared by placing at least one sheet of carbon fibre between an inner mould and an outer mould, placing carbon fibre filaments in a plurality of gear tooth cavities formed between the inner mould and the outer mould, injecting an adhesive resin, and compressing the sheet of carbon fibre, the carbon fibre filaments and the adhesive resin with a compression mould.

[FIG. 4]

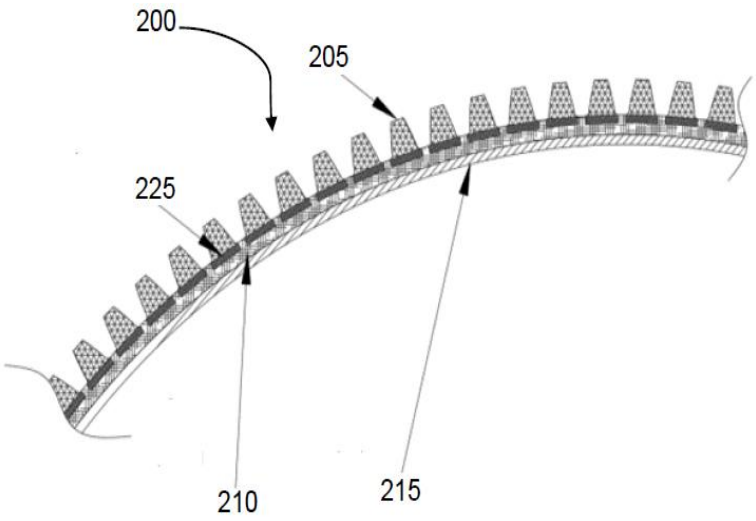

FIG. 4

APPLICATIONS PUBLISHED UNDER SECTION 27 - cont'd

(12) SG PATENT APPLICATION

(13) A

(43) Publication Date: 31/01/2024

(21) Application No: 10202303273S

(71) Applicant(s): LZLABS GMBH

(22) Date of filing: 28/04/2017

(72) Inventor(s): JAEGER, Jan; DURAND, Didier; DITSCHEID, Pierre-Jean; VUATTOUX, Jean-Luc

(30) Priority Data:

(74) Agent(s): PIZZEYS PTE. LTD.

(51) International Patent Classification:

(54) Title of Invention: CONTAINERIZED DEPLOYMENT OF MICROSERVICES BASED ON MONOLITHIC LEGACY APPLICATIONS

(57) Abstract:

The present disclosure provides a scalable container-based system implemented in computer instructions stored in a non-transitory medium. The present disclosure further provides a method of creating and operating a scalable container-based system.

Fig. 3

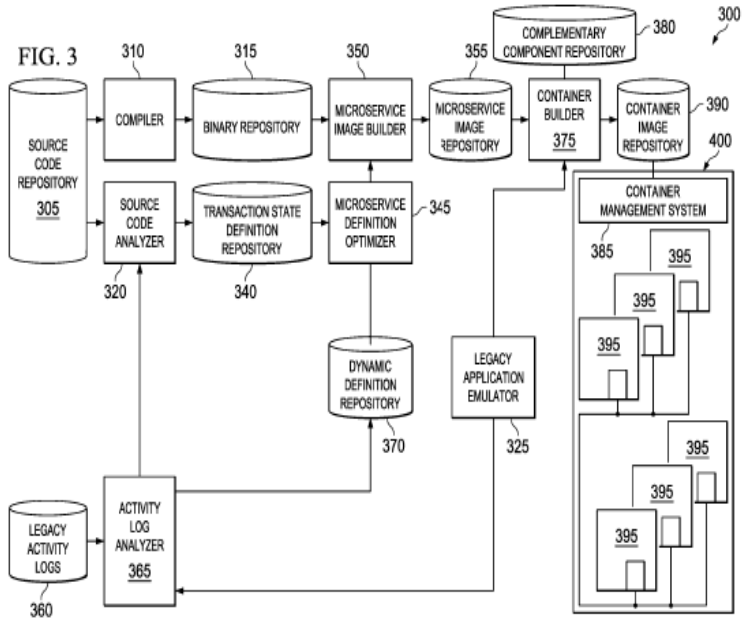

APPLICATIONS PUBLISHED UNDER SECTION 27 - cont'd

(12) SG PATENT APPLICATION

(13) A

(43) Publication Date: 31/01/2024

(21) Application No: 10202303278W

(71) Applicant(s): CORNELL UNIVERSITY

(22) Date of filing: 22/06/2017

(72) Inventor(s): BABICH, John W.; KELLY, James M.; AMOR-COARASA, Alejandro; PONNALA, Shashikanth

(30) Priority Data:
62/353,735
23/06/2016
US

(74) Agent(s): VIERING, JENTSCHURA & PARTNER LLP

(51) International Patent Classification:

(54) Title of Invention: DOUBLE TARGETED CONSTRUCTS TO AFFECT TUMOR KILL

(57) Abstract:

The present technology is directed to compounds, compositions, medicaments, and methods related to the treatment of cancers expressing PSMA. The compounds are of Formulas I & II, or pharmaceutically acceptable salts thereof. The present technology is especially well-suited for use in treating prostate cancer.

FIG. 7A

FIG. 7A

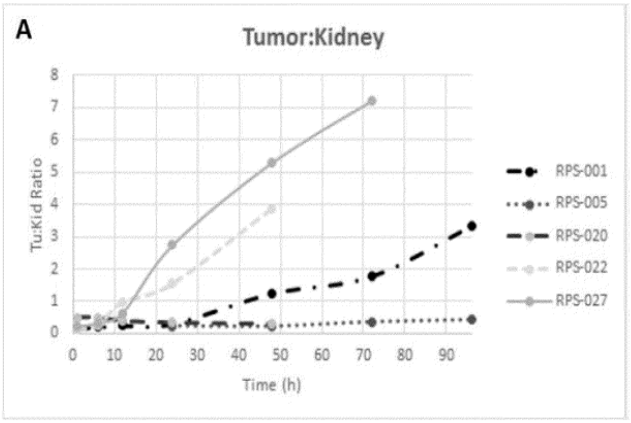

APPLICATIONS PUBLISHED UNDER SECTION 27 - cont'd

(12) SG PATENT APPLICATION (13) A (43) Publication Date: 31/01/2024 (21) Application No: 10202303281R (71) Applicant(s): MAGENTA THERAPEUTICS, INC. (22) Date of filing: 29/11/2018 (72) Inventor(s): BOITANO, Anthony; COOKE, Michael; PALCHAUDHURI, Rahul; MCDONOUGH, Sean (30) Priority Data: 62/592,214 29/11/2017 US (74) Agent(s): DREW & NAPIER LLC (51) International Patent Classification:	(54) Title of Invention: COMPOSITIONS AND METHODS FOR THE DEPLETION OF CD5+ CELLS (57) Abstract: The invention provides anti-CD5 antibodies, antigen-binding fragments thereof, and antibody drug conjugates thereof, for use in treating, for example, a stem cell disorder, cancer, or autoimmune disease, among other hematological and proliferative diseases. Compositions and methods for depleting populations of CD5+ cells, such as CD5+ cancer cells and CD5+ immune cells are described, and can be used to treat cancers and autoimmune diseases directly as stand-alone therapies by eradicating cancerous cells and autoreactive immune cells that express CD5 and/or to prepare a patient for hematopoietic stem cell transplantation, for instance, by depleting populations of CD5+ immune cells that cross-react with, and mount an immune response against, non-self hematopoietic stem cells. No suitable figure

APPLICATIONS PUBLISHED UNDER SECTION 27 - cont'd

(12) SG PATENT APPLICATION

(13) A

(43) Publication Date: 31/01/2024

(21) Application No: 10202303288U

(71) Applicant(s): THE UNIVERSITY OF NEWCASTLE

(22) Date of filing: 21/06/2017

(72) Inventor(s): MCFADDEN, Sally Anne

(30) Priority Data:
2016902429
21/06/2016
AU

(74) Agent(s): DAVIES COLLISON CAVE ASIA PTE. LTD.

(51) International Patent Classification:

(54) Title of Invention: TREATMENT FOR MYOPIA

(57) Abstract:

Provided herein are methods for treating or preventing myopia, or for inhibiting the development of myopia, comprising administering to a subject in need thereof an effective amount of an agent capable of increasing nitric oxide levels in one or more ocular cells or an agent capable of promoting or increasing the expression and/or activity of nNOS in one or more ocular cells. Also provided are methods for inducing or promoting nNOS expression and/or activity in one or more ocular cells, comprising exposing said cells to an effective amount of L-arginine.

[Figure 1]

FIGURE 1

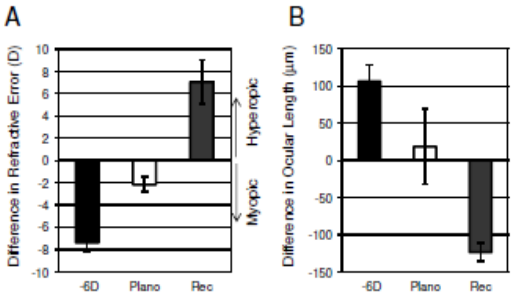

APPLICATIONS PUBLISHED UNDER SECTION 27 - cont'd

(12) SG PATENT APPLICATION (13) A (43) Publication Date: 31/01/2024 (21) Application No: 10202303303Q (71) Applicant(s): RECURIUM IP HOLDINGS, LLC (22) Date of filing: 26/02/2019 (72) Inventor(s): HUANG, Peter, Qinhua; BUNKER, Kevin, Duane; BOREN, Brant, Clayton; HEGDE, Sayee, Gajanan; LIU, Hui; UNNI, Aditya, Krishnan; ABRAHAM, Sunny; HOPKINS, Chad, Daniel; PALIWAL, Sunil (30) Priority Data: 62/641,149 09/03/2018 US 62/755,163 02/11/2018 US (74) Agent(s): DREW & NAPIER LLC (51) International Patent Classification:	(54) Title of Invention: SUBSTITUTED 1,2-DIHYDRO-3H-PYRAZOLO[3,4-D]PYRIMIDIN-3-ONES (57) Abstract: Compounds of Formula (I) are provided herein. Such compounds, as well as pharmaceutically acceptable salts and compositions thereof, are useful for treating diseases or conditions, including conditions characterized by excessive cellular proliferation, such as breast cancer. No Figure

APPLICATIONS PUBLISHED UNDER SECTION 27 - cont'd

(12) SG PATENT APPLICATION

(13) A

(43) Publication Date: 31/01/2024

(21) Application No: 10202303305S

(71) Applicant(s): Lenz Therapeutics, Inc.

(22) Date of filing: 08/10/2019

(72) Inventor(s): HORN, Gerald

(30) Priority Data:
62/743,720
10/10/2018
US

(74) Agent(s): DAVIES COLLISON CAVE ASIA PTE. LTD.

(51) International Patent Classification:

(54) Title of Invention: COMPOSITIONS AND METHODS FOR THE TREATMENT OF PRESBYOPIA

(57) Abstract:

The invention provides compositions and methods for the treatment of presbyopia. The methods preferably comprise storing an aceclidine composition in a container having a headspace at a temperature from about 2 to about 8 degrees Celsius. The methods further comprise filling the container under an inert gas overlay and/or enclosing the container an anti-leaching material or disposing the container in a second container containing an anti-leaching material.

[Figure 1]

FIG. 1

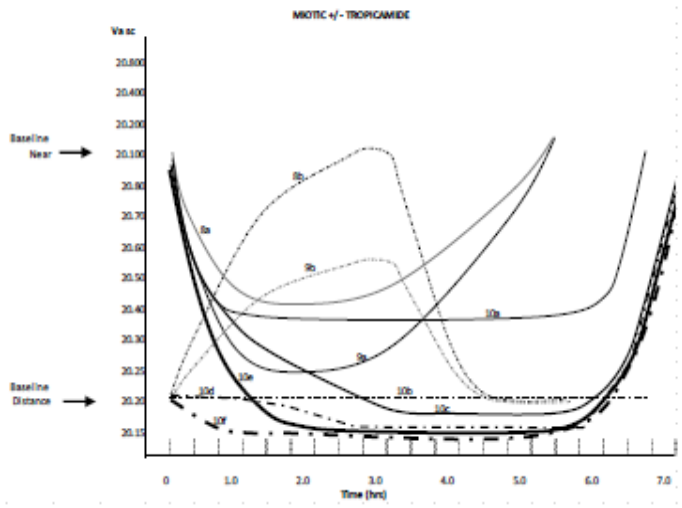

APPLICATIONS PUBLISHED UNDER SECTION 27 - cont'd

(12) SG PATENT APPLICATION

(13) A

(43) Publication Date: 31/01/2024

(21) Application No: 10202303308Y

(71) Applicant(s): VACCINEX, INC.

(22) Date of filing: 21/10/2014

(72) Inventor(s): SMITH, Ernest S.; ZAUDERER, Maurice; BOWERS, William J.; JONASON, Alan

(30) Priority Data:
61/893,814
21/10/2013
US

61/979,384
14/04/2014
US

62/012,805
16/06/2014
US

(74) Agent(s): SPRUSON & FERGUSON (ASIA) PTE. LTD.

(51) International Patent Classification:

(54) Title of Invention: Use Of Semaphorin-4D Binding Molecules For Treating Neurodegenerative Disorders

(57) Abstract:

Provided are methods for alleviating symptoms in a subject having a neurodegenerative disorder, comprising administering to the subject an effective amount of an isolated binding molecule which specifically binds to semaphorin-4D (SEMA4D) or to its Plexin-B1 or Plexin-B2 receptors. Further provided is an isolated binding molecule which specifically binds to the same SEMA4D epitope as a reference monoclonal antibody selected from the group consisting of VX15/2503 and 67.

Figures. 7A and 7B

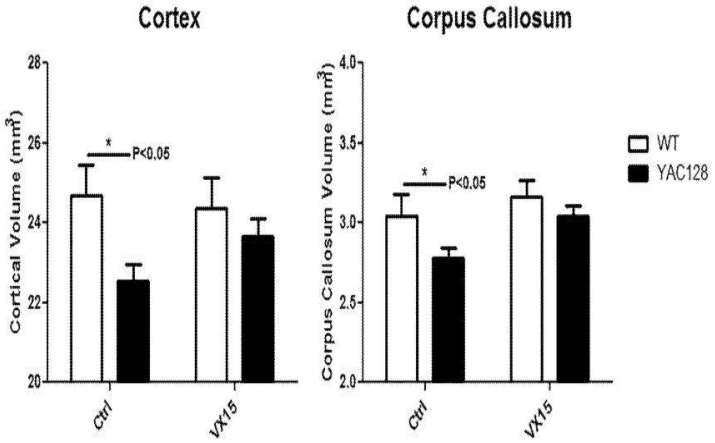

FIG. 7A FIG. 7B

APPLICATIONS PUBLISHED UNDER SECTION 27 - cont'd

(12) SG PATENT APPLICATION

(13) A

(43) Publication Date: 31/01/2024

(21) Application No: 10202303332S

(71) Applicant(s): GLOBAL BLOOD THERAPEUTICS, INC.

(22) Date of filing: 10/03/2014

(72) Inventor(s): METCALF, Brian W.; LI, Zhe; XU, Qing; GWALTNEY, Stephen L., II.; HARRIS, Jason R.; YEE, Calvin W.

(30) Priority Data:

13/815,770	15/03/2013	US
61/905,802	18/11/2013	US
61/905,803	18/11/2013	US

(74) Agent(s): SPRUSON & FERGUSON (ASIA) PTE. LTD.

(51) International Patent Classification:

(54) Title of Invention: COMPOUNDS AND USES THEREOF FOR THE MODULATION OF HEMOGLOBIN

(57) Abstract:

Provide herein are compounds and pharmaceutical compositions suitable as modulators of hemoglobin, methods and intermediates for their preparation, and methods for their use in treating disorders mediated by hemoglobin and disorders that would benefit from tissue and/or cellular oxygenation.

No Suitable Fig

APPLICATIONS PUBLISHED UNDER SECTION 27 - cont'd

(12) SG PATENT APPLICATION

(13) A

(43) Publication Date: 31/01/2024

(21) Application No: 10202303341X

(71) Applicant(s): REGENERON PHARMACEUTICALS, INC.

(22) Date of filing: 04/06/2020

(72) Inventor(s): MCWHIRTER, John;HANSEN, Johanna;BABB, Robert;GUO, Chunguang;MACDONALD, Lynn;MURPHY, Andrew J.

(30) Priority Data:

62/857,712	05/06/2019	US

(74) Agent(s): MIRANDAH ASIA (SINGAPORE) PTE LTD

(51) International Patent Classification:

(54) Title of Invention: NON-HUMAN ANIMALS HAVING A LIMITED LAMBDA LIGHT CHAIN REPERTOIRE EXPRESSED FROM THE KAPPA LOCUS AND USES THEREOF

(57) Abstract:

The present disclosure provides, among other things, genetically modified non-human animals whose germline genome comprises an engineered endogenous immunoglobulin κ light chain locus comprising a single rearranged human immunoglobulin λ light chain variable region operably linked to a non-human Cλ gene segment, where the single rearranged human immunoglobulin λ light chain variable region comprises a human Vλ gene segment and a human Jλ gene segment. All immunoglobulin λ light chains expressed by B cells of the genetically modified non-human animal include human immunoglobulin λ light chain variable domains expressed from the single rearranged human immunoglobulin λ light chain variable region or a somatically hypermutated version thereof. Such animals, tissues from such animals, and cells from such animals represent an effective platform for producing antibodies, e.g., bispecific antibodies.

[Figure 1A]

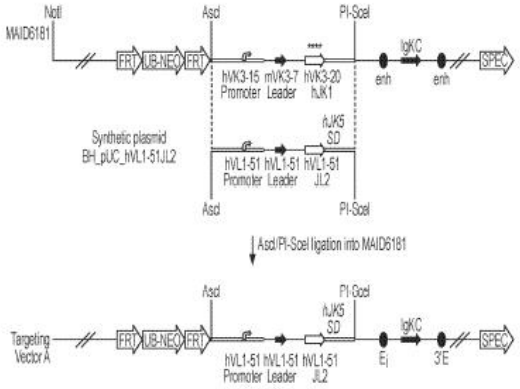

Figure 1A

APPLICATIONS PUBLISHED UNDER SECTION 27 - cont'd

(12) SG PATENT APPLICATION

(13) A

(43) Publication Date: 31/01/2024

(21) Application No: 10202303343Y

(71) Applicant(s): QUALCOMM INCORPORATED

(22) Date of filing: 07/05/2020

(72) Inventor(s): LEI, Jing;PARK, Seyong;CAO, Yiqing;GAAL, Peter;CHEN, Wanshi

(30) Priority Data: PCT/CN2019/089292 30/05/2019 CHINA

(74) Agent(s): DREW & NAPIER LLC

(51) International Patent Classification:

(54) Title of Invention: MAPPING ONE PREAMBLE TO MULTIPLE PHYSICAL UPLINK SHARED CHANNEL RESOURCE UNITS FOR TWO-STEP RANDOM ACCESS PROCEDURE

(57) Abstract:

Aspects are provided to support payloads for msgA transmission in a two-step random access (RACH) procedure by providing a one-to-many mapping arrangement between preambles and physical uplink shared channel (PUSCH) resource units (PRUs). A preamble is determined by the UE which is mapped to one or more groups of PRUs to support piggybacking of uplink control information (UCI), frequency hopping on PUSCH, and multiple-slot repetition for msgA transmissions. By piggybacking UCI to a payload in msgA, flexibility may be provided in the selection of MCS and waveform as well as resource allocation for demodulation reference signals (DMRS) and PUSCH in PRUs. Moreover, by allowing a payload to hop to different frequencies on PUSCH during the transmission of msgA, a gain in frequency diversity and interference averaging may be provided, and by enabling a payload to repeat across multiple slots in msgA transmission, coverage enhancement and/or reliability may be increased.

Fig. 6

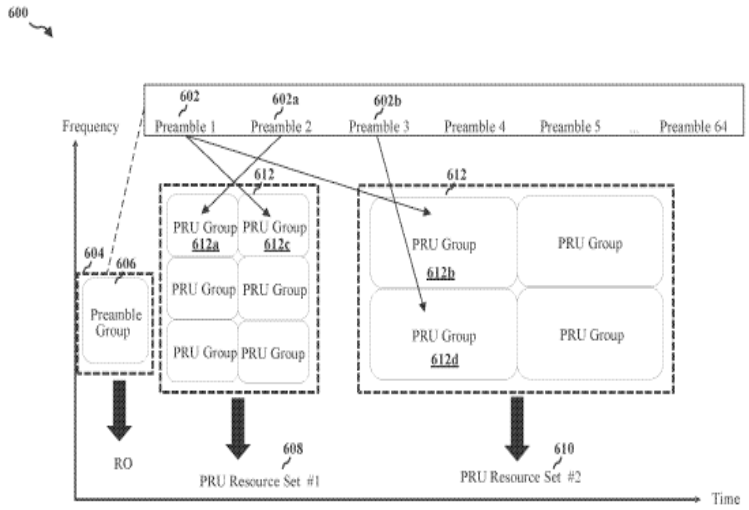

FIG. 6

APPLICATIONS PUBLISHED UNDER SECTION 27 - cont'd

(12) SG PATENT APPLICATION

(13) A

(43) Publication Date: 31/01/2024

(21) Application No: 10202303345R

(71) Applicant(s): PHARMACYCLICS LLC

(22) Date of filing: 03/06/2013

(72) Inventor(s): SMYTH, Mark; GOLDMAN, Erick; WIRTH, David, D.; PURRO, Norbert

(30) Priority Data:

61/655,381 04/06/2012 US

(74) Agent(s): SPRUSON & FERGUSON (ASIA) PTE. LTD.

(51) International Patent Classification:

(54) Title of Invention: Crystalline Forms Of A Brutons Tyrosine Kinase Inhibitor

(57) Abstract:

Described herein is the Bruton's tyrosine kinase (Btk) inhibitor 1-((R)-3-(4-amino-3-(4-phenoxyphenyl)-1H-pyrazolo[3,4-d]pyrimidin-1-yl)piperidin-1-yl)prop-2-en-1-one, including crystalline forms, solvates and pharmaceutically acceptable salts thereof. Also disclosed are pharmaceutical compositions that include the Btk inhibitor, as well as methods of using the Btk inhibitor, alone or in combination with other therapeutic agents, for the treatment of autoimmune diseases or conditions, heteroimmune diseases or conditions, cancer, including lymphoma, and inflammatory diseases or conditions.

[FIG. 1]

FIG. 1

XRPD Pattern of Form A

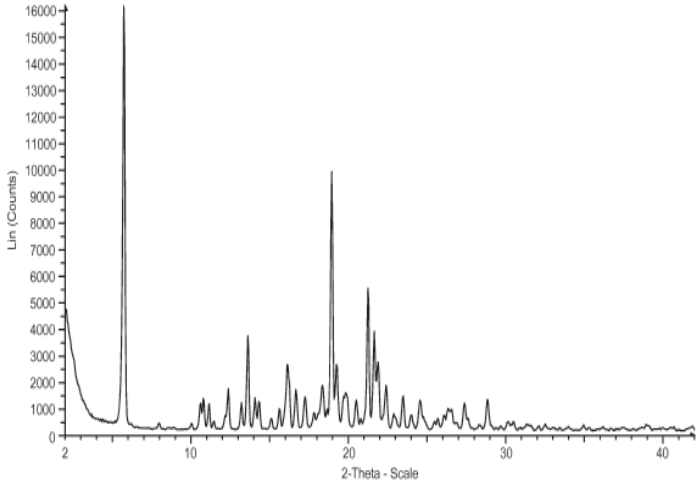

APPLICATIONS PUBLISHED UNDER SECTION 27 - cont'd

(12) SG PATENT APPLICATION

(13) A

(43) Publication Date: 31/01/2024

(21) Application No: 10202303351P

(71) Applicant(s): PURETECH LYT 100, INC.

(22) Date of filing: 16/09/2019

(72) Inventor(s): ELENKO, Eric; CHEN, Michael C.; SABOUNJIAN, LuAnn

(30) Priority Data:

62/731,570	14/09/2018	US
62/750,377	25/10/2018	US
62/839,256	26/04/2019	US
62/884,984	09/08/2019	US

(74) Agent(s): SPRUSON & FERGUSON (ASIA) PTE. LTD.

(51) International Patent Classification:

(54) Title of Invention: DEUTERIUM-ENRICHED PIRFENIDONE AND METHODS OF USE THEREOF

(57) Abstract:

Disclosed herein are deuterium-enriched *N*-Aryl pyridinone compounds, optionally in combination with one or more additional therapeutic agents, pharmaceutical compositions comprising the same, methods of preparation thereof, and methods of use thereof. Such compounds and compositions are useful, for example, in treating diseases, disorders, or conditions such as edema.

No suitable figure

APPLICATIONS PUBLISHED UNDER SECTION 27 - cont'd

(12) SG PATENT APPLICATION

(13) A

(43) Publication Date: 31/01/2024

(21) Application No: 10202303355U

(71) Applicant(s): FRESENIUS MEDICAL CARE DEUTSCHLAND GMBH

(22) Date of filing: 21/12/2021

(72) Inventor(s): HEINZ, Thomas; REITER, Sven; WEHMEYER, Wolfgang; WIESEN, Gerhard

(30) Priority Data:
10 2020 134 427.9
21/12/2020
GERMANY

(74) Agent(s): DAVIES COLLISON CAVE ASIA PTE. LTD.

(51) International Patent Classification:

(54) Title of Invention: METHOD FOR CLEANING A FILTER MODULE, AND FILTER MODULE FOR CARRYING OUT SAID METHOD

(57) Abstract:

A method is disclosed for cleaning a filter module by means of a filter module having the following steps: providing a filter module having a filter head with two filter head openings; channelling fluid into the filter head via a first filter head opening; and channelling a portion of the fluid out of the filter head via a second filter head opening. The method is characterized in that, after fluid has been channelled into the filter head (210) via a first filter head opening, the fluid is partially swirled in the filter head.

(Fig. 1a)

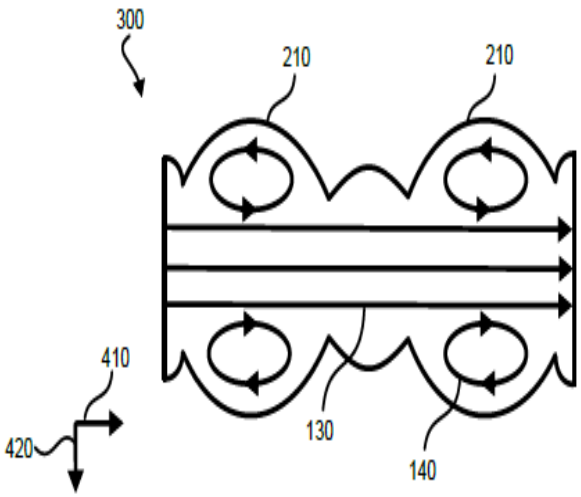

Fig. 1a

APPLICATIONS PUBLISHED UNDER SECTION 27 - cont'd

(12) SG PATENT APPLICATION

(13) A

(43) Publication Date: 31/01/2024

(21) Application No: 10202303358V

(71) Applicant(s): THE TRUSTEES OF THE UNIVERSITY OF PENNSYLVANIA

(22) Date of filing: 01/12/2021

(72) Inventor(s): PERCIVAL, Justin; SCHMID, Ralf; WILSON, James, M.

(30) Priority Data:

63/119,860 01/12/2020 US

63/179,807 26/04/2021 US

(74) Agent(s): MARKS & CLERK SINGAPORE LLP

(51) International Patent Classification:

(54) Title of Invention: COMPOSITIONS AND USES THEREOF FOR TREATMENT OF ANGELMAN SYNDROME

(57) Abstract:

A rAAV having a vector genome with a UBE3A coding sequence is provided. Also provided is a method for treating one or more symptoms of Angelman syndrome (AS) in a patient having deficient UBE3A expression in neurons, wherein the method comprises delivering a rAAV having a nucleic acid sequence which encodes UBE3A.

No Figure

APPLICATIONS PUBLISHED UNDER SECTION 27 - cont'd

(12) SG PATENT APPLICATION

(13) A

(43) Publication Date: 31/01/2024

(21) Application No: 10202303365V

(71) Applicant(s): EDDY CURRENT LIMITED PARTNERSHIP

(22) Date of filing: 04/12/2015

(72) Inventor(s): DIEHL, Andrew Karl; HILL, Weston; WALTERS, Dave

(30) Priority Data:

701549 04/12/2014 NZ

(74) Agent(s): Amica Law LLC

(51) International Patent Classification:

(54) Title of Invention: TRANSMISSIONS INCORPORATING EDDY CURRENT BRAKING

(57) Abstract:

A transmission mechanism comprising at least one driving member; and at least one driven member, movement of the at least one driven member urged via transmission of movement from the at least one driving member; drag force inducing elements that move at different relative rates comprising at least one electrical conductor and at least one magnet, each element coupled with the transmission mechanism in a manner that allows the elements to interact on movement and generate eddy current drag forces, the elements thereby acting to govern the rate of movement between the driving and driven members. The conductor can be axially driven forward or backward to apply or withdraw the eddy current braking effect.

FIGURE 1

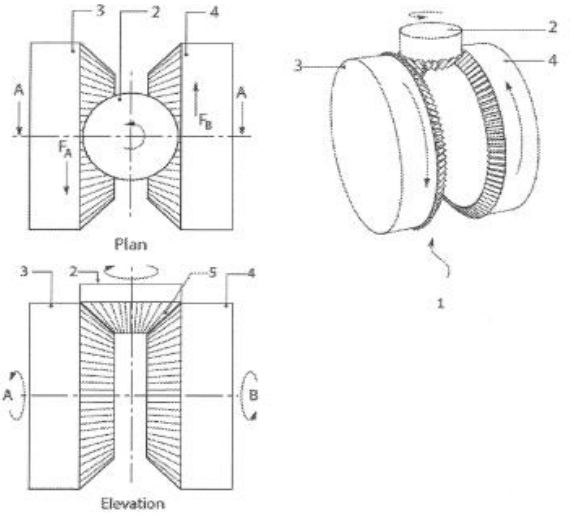

FIGURE 1

APPLICATIONS PUBLISHED UNDER SECTION 27 - cont'd

(12) SG PATENT APPLICATION

(13) A

(43) Publication Date: 31/01/2024

(21) Application No: 10202303376Q

(71) Applicant(s): Seagen Inc.

(22) Date of filing: 30/11/2018

(72) Inventor(s): KENNEDY, Dana; KOSTIC, Ana; CORWIN, Elizabeth; DRACHMAN, Jonathan; HAUGHNEY, Peter; ZHAO, Baiteng; GARFIN, Phillip; PALANCA-WESSELS, Corinna; ABIDOYE, Oyewale O.

(30) Priority Data:

62/593,660 01/12/2017 US

(74) Agent(s): SPRUSON & FERGUSON (ASIA) PTE. LTD.

(51) International Patent Classification:

(54) Title of Invention: HUMANIZED ANTI-LIV1 ANTIBODIES FOR THE TREATMENT OF BREAST CANCER

(57) Abstract:

Methods for using anti-LIV1 antibodies, including drug conjugated anti-LIV1 antibodies, to inhibit proliferation of a LIV-1 -expressing cell, as well as for the treatment of one or more diseases or disorders associated with LIV-1 -expressing cells (e.g., a LIV-1 -associated breast cancer), are provided.

No Suitable Fig.

APPLICATIONS PUBLISHED UNDER SECTION 27 - cont'd

(12) SG PATENT APPLICATION

(13) A

(43) Publication Date: 31/01/2024

(21) Application No: 10202303377S

(71) Applicant(s): UNIVERSITÄT BERN

(22) Date of filing: 29/11/2017

(72) Inventor(s): LEUMANN, Christian; EVÉQUOZ, Damien

(30) Priority Data:

16201350.2 30/11/2016 EP

(74) Agent(s): Amica Law LLC

(51) International Patent Classification:

(54) Title of Invention: NOVEL BICYCLIC NUCLEOSIDES AND OLIGOMERS PREPARED THEREFROM

(57) Abstract:

The present invention relates to novel bicyclic nucleosides and oligomers prepared therefrom. In particular, the present invention relates to a compound of formula (I)

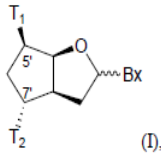

(I),

wherein one of T_1 and T_2 is OR_1 or OR_2; and the other of T_1 and T_2 is OR_1 or OR_2; wherein R_1 is H or a hydroxyl protecting group, and R_2 is a phosphorus moiety; and wherein Bx is a nucleobase. Furthermore, the present invention relates to said compounds, bicyclic nucleosides and said oligomers for use as a medicament in the prevention, treatment or diagnosis of a disease.

[No suitable accompanying figure]

APPLICATIONS PUBLISHED UNDER SECTION 27 - cont'd

(12) SG PATENT APPLICATION

(13) A

(43) Publication Date: 31/01/2024

(21) Application No: 10202303379Y

(71) Applicant(s): ELTA SYSTEMS LTD.

(22) Date of filing: 13/12/2021

(72) Inventor(s): FIREAIZEN, Moshe; LIPKIN, Yiftah; RAZON, Aharon; ELMAKIAS, Michael

(30) Priority Data:

279913 31/12/2020 IL

(74) Agent(s): DAVIES COLLISON CAVE ASIA PTE. LTD.

(51) International Patent Classification:

(54) Title of Invention: POSITIONING SYSTEM, METHOD AND COMPUTER PROGRAM PRODUCT UTILIZING INPUTS FROM GEOSTATIONARY COMMUNICATION SATELLITES

(57) Abstract:

A navigation system comprising at least one terminal configured to at least once transmit, to a communicant, e.g. via n > = 1 satellite/s, a request for a reply transmission and wherein the communicant, responsively, at least once transmits a response transmission to the terminal. The terminal measures the response transmission's time of arrival and/or round-trip time and determines a round-trip time characterizing the terminal's own communication, via each of the satellite/s, with the communicant, and/or the terminal's own range (aka distance) from each of the satellite/s. The terminal is configured to derive self-orientation data from at least said round-trip time and from internal delay data characterizing the at least one satellite and/or the communicant.

[Fig. 7]

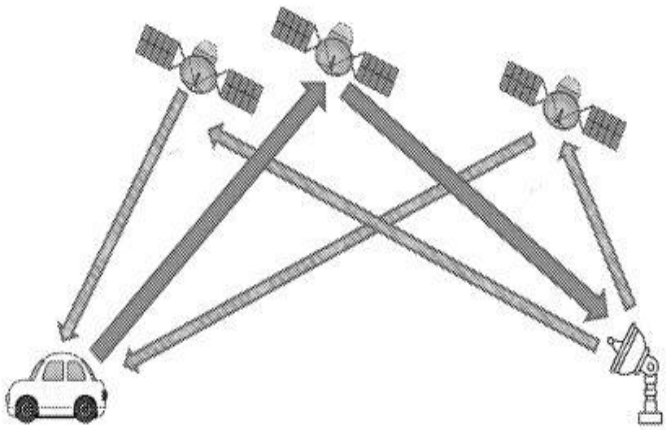

Figure 7

APPLICATIONS PUBLISHED UNDER SECTION 27 - cont'd

(12) SG PATENT APPLICATION

(13) A

(43) Publication Date: 31/01/2024

(21) Application No: 10202303391V

(71) Applicant(s): QUALCOMM INCORPORATED

(22) Date of filing: 15/04/2020

(72) Inventor(s): ZHANG, Juan; HORN, Gavin Bernard; OZTURK, Ozcan

(30) Priority Data: PCT/CN2019/090297 06/06/2019 CHINA

(74) Agent(s): DREW & NAPIER LLC

(51) International Patent Classification:

(54) Title of Invention: SERVICE PRIORITY INFORMATION FOR MULTI-SIM USER EQUIPMENT PAGING

(57) Abstract:

Certain aspects of the present disclosure provide techniques for service priority information for multi-SIM user equipment (UE) paging. An exemplary method generally includes communicating with a first network using a first set of credentials, wherein the UE includes a second set of credentials associated with a second network; receiving a paging message for an information transmission in the second network, wherein the paging message includes service priority information corresponding to the information transmission; determining, from the service priority information, a service priority value corresponding to the information transmission based, at least in part, on policy configuration information; determining whether to establish a connection in the second network in response to the paging message based, at least in part, on the service priority value; and taking one or more actions based, at least in part, on the determination.

Fig. 4

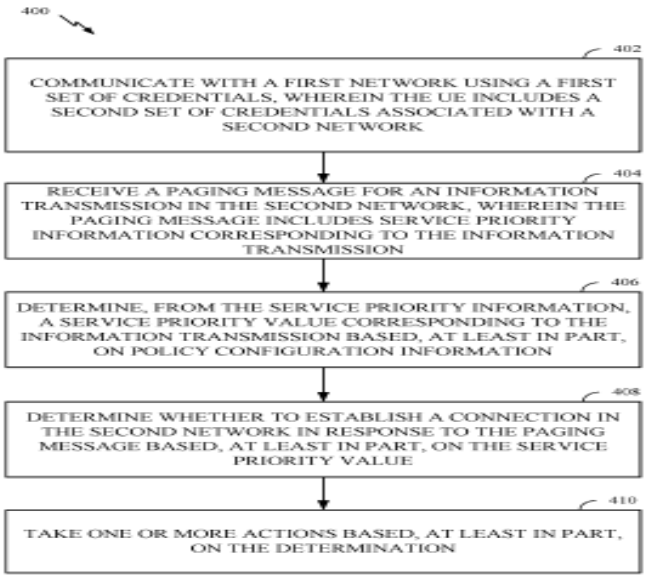

FIG. 4

APPLICATIONS PUBLISHED UNDER SECTION 27 - cont'd

(12) SG PATENT APPLICATION

(13) A

(43) Publication Date: 31/01/2024

(21) Application No: 10202303392W

(71) Applicant(s): VERSUM MATERIALS US, LLC

(22) Date of filing: 28/05/2020

(72) Inventor(s): LI, Guocan; IVANOV, Sergei V.; LEI, Xinjian; LI, Hongbo

(30) Priority Data:
62/857,650
05/06/2019
UNITED STATES OF AMERICA

(74) Agent(s): Donaldson & Burkinshaw LLP

(51) International Patent Classification:

(54) Title of Invention: NEW GROUP V AND VI TRANSITION METAL PRECURSORS FOR THIN FILM DEPOSITION

(57) Abstract:

Described herein are Group V and VI compounds used as precursors for depositing Group V and VI-containing films. Ligands with alkyl, amide, imide, amidinate groups and/or cyclopentadienyl (Cp) ligands are used to form Group V and VI complexes used as precursors. Examples of Group V and VI precursor compounds include, but are not limited to, Cp amide imide alkyl vanadium compounds, Cp amide imide alkylamide vanadium compounds, Cp amide imide alkoxide vanadium compounds, Cp amide imide amidinate vanadium compounds, and alkylimide vanadium trichloride compounds. The Group V and VI precursors are used for deposition on substrate surfaces with superior film properties such as uniformity, continuity, and low resistance. Examples of substrate surfaces for deposition of metal-containing films include, but are not limited to metals, metal oxides, and metal nitrides.

Figure 1

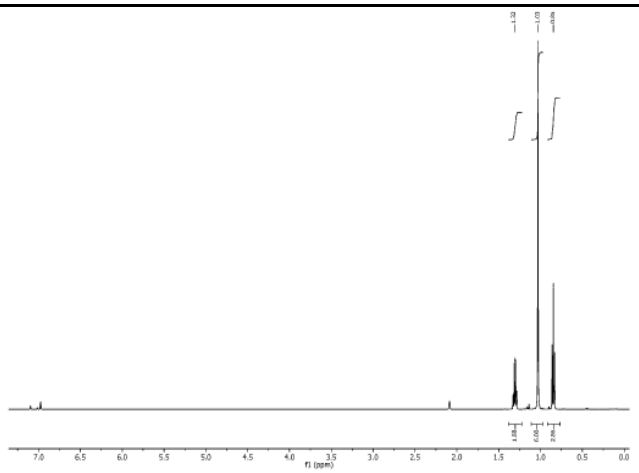

Figure 1

APPLICATIONS PUBLISHED UNDER SECTION 27 - cont'd

(12) SG PATENT APPLICATION

(13) A

(43) Publication Date: 31/01/2024

(21) Application No: 10202303394R

(71) Applicant(s): ByHeart, Inc.

(22) Date of filing: 30/11/2018

(72) Inventor(s): BELLDEGRUN, Ron; FUNT, Mia

(30) Priority Data:

15/829,703 01/12/2017 US

(74) Agent(s): MARKS & CLERK SINGAPORE LLP

(51) International Patent Classification:

(54) Title of Invention: FORMULATIONS FOR NUTRITIONAL SUPPORT IN SUBJECTS IN NEED THEREOF

(57) Abstract:

Formulations having a protein component, in which the protein contains one or more digestion-aiding proteins, and/or one or more immunoprotective proteins. The formulations may also contain a fat component, a carbohydrate component, and vitamins and minerals. These formulations can be used to provide nutritional support to a subject, either as dietary supplements or as a primary source of nutrition, such as for an infant formula.

No Figure

APPLICATIONS PUBLISHED UNDER SECTION 27 - cont'd

(12) SG PATENT APPLICATION

(13) A

(43) Publication Date: 31/01/2024

(21) Application No: 10202303397U

(71) Applicant(s): QED THERAPEUTICS, INC.

(22) Date of filing: 29/05/2020

(72) Inventor(s): PANICUCCI, Riccardo; ARANGIO, Susan; BERMAN, Craig; MONTEITH, Michael; SOIFER, Harris; LI, Gang; DAMBKOWSKI, Carl; MULREANY, Daniel

(30) Priority Data:

62/855,277 31/05/2019 US

62/906,194 26/09/2019 US

(74) Agent(s): SPRUSON & FERGUSON (ASIA) PTE. LTD.

(51) International Patent Classification:

(54) Title of Invention: METHODS OF TREATING URINARY SYSTEM CANCERS

(57) Abstract:

Provided herein are methods of treating an upper tract urothelial carcinoma in a patient by administering to the patient infigratinib or a pharmaceutically acceptable salt thereof. Also provided herein are methods of treating non-muscle invasive bladder cancer by administering to the patient infigratinib or a pharmaceutically acceptable salt thereof.

[Fig. 1A]

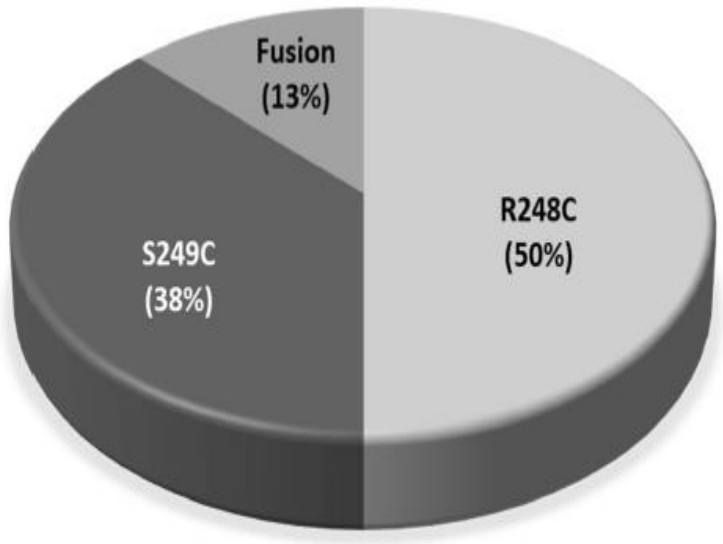

FIG. 1A

APPLICATIONS PUBLISHED UNDER SECTION 27 - cont'd

(12) SG PATENT APPLICATION

(13) A

(43) Publication Date: 31/01/2024

(21) Application No: 10202303398X

(71) Applicant(s): ARENA PHARMACEUTICALS, INC.

(22) Date of filing: 27/01/2011

(72) Inventor(s): MONTALBAN, Antonio Garrido ; BUZARD, Daniel John ; DEMATTEI, John Aldo ; GHARBAOUI, Tawfik ; JOHANNSEN, Stephen Robert ; KRISHNAN, Ashwin M. ; KUHLMAN, Young Mi ; MA, You-An ; MARTINELLI, Michael John ; SATO, Suzanne Michiko ; SENGUPTA, Dipanjan

(30) Priority Data:

61/336,835	27/01/2010	US

(74) Agent(s): SPRUSON & FERGUSON (ASIA) PTE. LTD.

(51) International Patent Classification:

(54) Title of Invention: PROCESSES FOR THE PREPARATION OF (R)-2-(7-(4-CYCLOPENTYL-3-(TRIFLUOROMETHYL)BENZYLOXY)-1,2,3,4-TETRAHYDROCYCLOPENTA[B]INDOL-3-YL)ACETIC ACID AND SALTS THEREOF

(57) Abstract:

The present invention relates to processes and intermediates useful in the preparation of of (R)-2-(7-(4-cyclopentyl-3-(trifluoromethyl)benzyloxy)-1,2,3,4-tetrahydrocyclopenta[b]indol-3-yl)acetic acid of Formula (Ia) and salts thereof, an S1P1 receptor modulator that is useful in the treatment of S1P1 receptor-associated disorders, for example, diseases and disorders mediated by lymphocytes, transplant rejection, autoimmune diseases and disorders, inflammatory diseases and disorders (e.g., acute and chronic inflammatory conditions), cancer, and conditions characterized by an underlying defect in vascular integrity or that are associated with angiogenesis such as may be pathologic (e.g., as may occur in inflammation, tumor development and atherosclerosis).

No suitable figure.

APPLICATIONS PUBLISHED UNDER SECTION 27 - cont'd

(12) SG PATENT APPLICATION

(13) A

(43) Publication Date: 31/01/2024

(21) Application No: 10202303400S

(71) Applicant(s): BAYER AKTIENGESELLSCHAFT

(22) Date of filing: 18/04/2019

(72) Inventor(s): ARLT, Alexander; HALLENBACH, Werner; SCHWARZ, Hans-Georg; FÜSSLEIN, Martin; WROBLOWSKY, Heinz-Juergen; BUSCATO ARSEQUELL, Estella; LINKA, Marc; ILG, Kerstin; DAMIJONAITIS, Arunas Jonas; EBBINGHAUS-KINTSCHER, Ulrich; GÖRGENS, Ulrich; CANCHO GRANDE, Yolanda; JESCHKE, Peter; TELSER, Joachim; HEISLER, Iring; TURBERG, Andreas

(30) Priority Data:

18169333.4	25/04/2018	EP
18188221.8	09/08/2018	EP
18207519.2	21/11/2018	EP

(74) Agent(s): VIERING, JENTSCHURA & PARTNER LLP

(51) International Patent Classification:

(54) Title of Invention: NOVEL HETEROARYL-TRIAZOLE AND HETEROARYL-TETRAZOLE COMPOUNDS AS PESTICIDES

(57) Abstract:

The present invention relates to novel heteroaryl-triazole and heteroaryl-tetrazole compounds of the general formula (I), in which the structural elements Y, Q^1, Q^2, R^1, R^2, R^3, R^4 and R^5 have the meaning given in the description, to formulations and compositions comprising such compounds and for their use in the control of animal pests including arthropods and insects in plant protection and to their use for control of ectoparasites on animals.

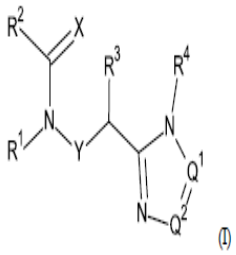

(I)

APPLICATIONS PUBLISHED UNDER SECTION 27 - cont'd

(12) SG PATENT APPLICATION

(13) A

(43) Publication Date: 31/01/2024

(21) Application No: 10202303402W

(71) Applicant(s): BASF AS

(22) Date of filing: 05/12/2018

(72) Inventor(s): STEINEGER, Hilde Hermansen; FRASER, David Alan; SKJÆRET, Tore

(30) Priority Data:

20171944	06/12/2017	NO
20171945	06/12/2017	NO
62/743,013	09/10/2018	US

(74) Agent(s): DREW & NAPIER LLC

(51) International Patent Classification:

(54) Title of Invention: FATTY ACID DERIVATIVES FOR TREATING NON-ALCOHOLIC STEATOHEPATITIS

(57) Abstract:

The present disclosure provides a compound for use in therapeutic and/or prophylactic treatment of non-alcoholic steatohepatitis (NASH) and/or alcoholic steatohepatitis (ASH). The compound for use according to the invention, is an unsaturated fatty acid with an oxygen incorporated in the β-position, and further comprising an α-substituent. More particularly, the invention provides a compound for use in treatment of NASH and/or ASH, and a method using this, wherein the compound is of Formula (II):

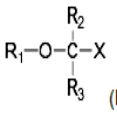

(II)

wherein R_1, R2, R3, X, and Y are as defined in the specification;
and wherein this compound may be administered alone or in combination with an additional active agent.

No Fig.

APPLICATIONS PUBLISHED UNDER SECTION 27 - cont'd

(12) SG PATENT APPLICATION

(13) A

(43) Publication Date: 31/01/2024

(21) Application No: 10202303403T

(71) Applicant(s): SENJU METAL INDUSTRY CO., LTD.

(22) Date of filing: 17/11/2021

(72) Inventor(s): IIJIMA Yuki; YOSHIKAWA Shunsaku; DEI Kanta; MATSUFUJI Takahiro; SUGISAWA Kota

(30) Priority Data:

63/115,611 19/11/2020 US

(74) Agent(s): DAVIES COLLISON CAVE ASIA PTE. LTD.

(51) International Patent Classification:

(54) Title of Invention: SOLDER ALLOY, SOLDER BALL AND SOLDER JOINT

(57) Abstract:

The present invention employs a lead-free and antimony-free solder alloy which has an alloy composition that contains from 1.0% by mass to 4.0% by mass of Ag, from 0.1% by mass to 1.0% by mass of Cu, from 0.1% by mass to 9.0% by mass of Bi, from 0.005% by mass to 0.3% by mass of Ni and from 0.001% by mass to 0.015% by mass of Ge, with the balance being made up of Sn.

[No figure]

APPLICATIONS PUBLISHED UNDER SECTION 27 - cont'd

(12) SG PATENT APPLICATION

(13) A

(43) Publication Date: 31/01/2024

(21) Application No: 10202303405P

(71) Applicant(s): ILLUMINA, INC.

(22) Date of filing: 05/01/2018

(72) Inventor(s): LANGLOIS, Robert;BELITZ, Paul

(30) Priority Data:
62/443,294
06/01/2017
UNITED STATES OF AMERICA

(74) Agent(s): MARKS & CLERK SINGAPORE LLP

(51) International Patent Classification:

(54) Title of Invention: PHASING CORRECTION

(57) Abstract:

Memory efficient methods determine corrected color values from image data acquired by a nucleic acid sequencer during a base calling cycle. Such methods may: (a) obtain an image of a substrate (e.g., a portion of a flow cell) including a plurality of sites where nucleic acid bases are read; (b) measure color values of the plurality of sites from the image of the substrate; (c) store the color values in a processor buffer of the sequencer's one or more processors; (d) retrieve partially phase-corrected color values of the plurality of sites, where the partially phase-corrected color values were stored in the sequencer's memory during an immediately preceding base calling cycle; (e) determine a prephasing correction; and (f) determine the corrected color values. In various implementations, these operations are all performed during a single base calling cycle. In certain embodiments, the methods additionally include using the corrected color values to make base calls for the plurality of sites. Sequencers may be designed or configured to implement such methods.

Figure 1

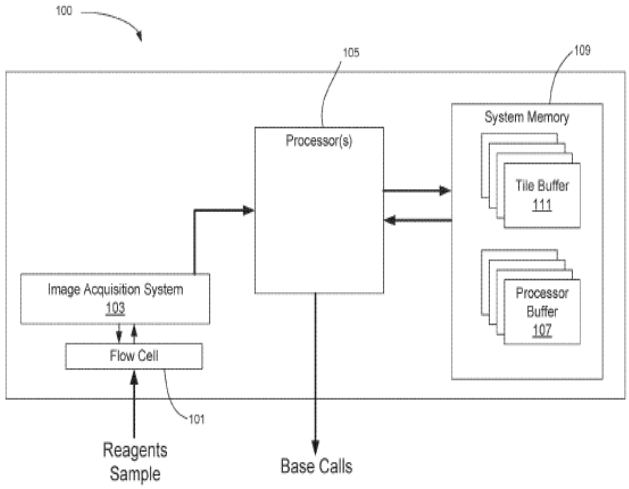

Figure 1

APPLICATIONS PUBLISHED UNDER SECTION 27 - cont'd

(12) SG PATENT APPLICATION

(13) A

(43) Publication Date: 31/01/2024

(21) Application No: 10202303406Y

(71) Applicant(s): TRIO LABS, INC.

(22) Date of filing: 06/03/2020

(72) Inventor(s): STEEGE, Adam T.C.

(30) Priority Data:
62/817,431
12/03/2019
UNITED STATES OF AMERICA

(74) Agent(s): DREW & NAPIER LLC

(51) International Patent Classification:

(54) Title of Invention: METHOD AND APPARATUS FOR DIGITAL FABRICATION OF OBJECTS USING ACTUATED MICROPIXELATION AND DYNAMIC DENSITY CONTROL

(57) Abstract:

A fabrication device includes a build surface to receive layers of material for production of a 3-dimensional solid representation of a digital model and an imaging component to bind respective portions of the build material into cross sections representative of portions of data contained in the digital model. The imaging component may be a programmable planar light source utilizing a micropixelation system and refractive pixel shifting mechanism, or other imaging system. The device may include a system for controlling the density of the printed part. The object may be a powder composite component using any of a variety of powder materials or a plastic component. The object may be further post-processed to produce a high precision metal or ceramic component.

[Fig.9]

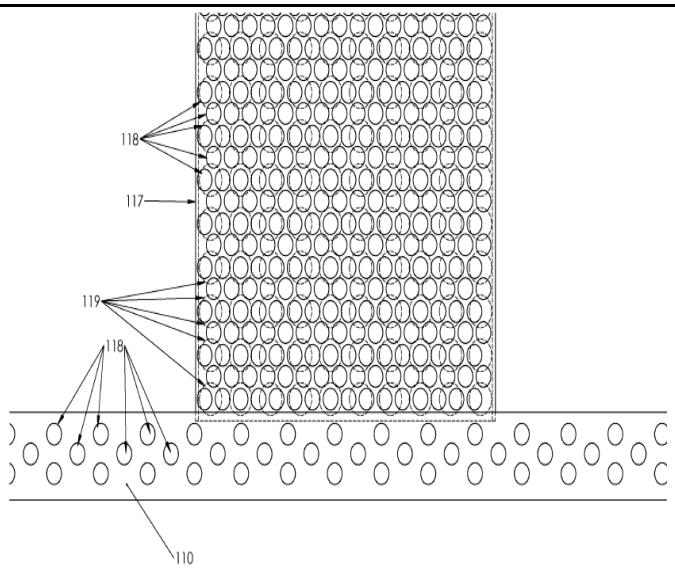

Fig. 9

APPLICATIONS PUBLISHED UNDER SECTION 27 - cont'd

(12) SG PATENT APPLICATION

(13) A

(43) Publication Date: 31/01/2024

(21) Application No: 10202303407U

(71) Applicant(s): Incyte Holdings Corporation

(22) Date of filing: 12/06/2013

(72) Inventor(s): WU, Liangxing; ZHANG, Colin; HE, Chunhong; SUN, Yaping; LU, Liang; QIAN, Ding-Quan; XU, Meizhong; ZHUO, Jincong; YAO, Wenqing

(30) Priority Data:

61/659,245	13/06/2012	US
61/691,463	21/08/2012	US
61/740,012	20/12/2012	US
61/774,841	08/03/2013	US

(74) Agent(s): NANYANG LAW LLC

(51) International Patent Classification:

(54) Title of Invention: SUBSTITUTED TRICYCLIC COMPOUNDS AS FGFR INHIBITORS

(57) Abstract:

The present invention relates to tricyclic compounds, and pharmaceutical compositions of the same, that are inhibitors of one or more FGFR enzymes and are useful in the treatment of FGFR-associated diseases such as cancer.

[NO FIGURE]

APPLICATIONS PUBLISHED UNDER SECTION 27 - cont'd

(12) SG PATENT APPLICATION

(13) A

(43) Publication Date: 31/01/2024

(21) Application No: 10202303417R

(71) Applicant(s): EAVOR TECHNOLOGIES INC.

(22) Date of filing: 28/05/2019

(72) Inventor(s): TOEWS, Matthew; CAIRNS, Paul; ANDREWS, Peter; CURTIS-SMITH, Andrew; HALE, Jonathan

(30) Priority Data:

62/693,950 04/07/2018 US

62/714,674 04/08/2018 US

(74) Agent(s): NANYANG LAW LLC

(51) International Patent Classification:

(54) Title of Invention: METHOD FOR FORMING HIGH EFFICIENCY GEOTHERMAL WELLBORES

(57) Abstract:

Wellbore synthesis techniques are disclosed suitable for use in geothermal applications. Embodiments are provided where open hole drilled wellbores are sealed while drilling to form an impervious layer at the wellbore/formation interface. The techniques may be chemical, thermal, mechanical, biological and are fully intended to irreversibly damage the formation in terms of the permeability thereof. With the permeability negated, the wellbore may be used to create a closed loop surface to surface geothermal well operable in the absence of well casing for maximizing thermal transfer to a circulating working fluid. Formulations for the working and drilling fluids are disclosed.

[FIGURE 3]

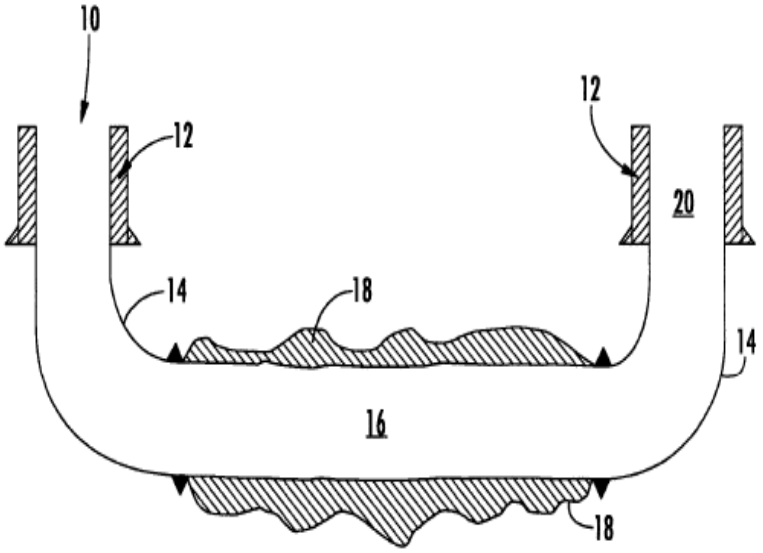

FIG. 3

APPLICATIONS PUBLISHED UNDER SECTION 27 - cont'd

(12) SG PATENT APPLICATION

(13) A

(43) Publication Date: 31/01/2024

(21) Application No: 10202303423Y

(71) Applicant(s): AIM IMMUNOTECH INC.

(22) Date of filing: 25/11/2019

(72) Inventor(s): STRAYER, David, R.; YOUNG, Diane, L.; EQUELS, Thomas, K.

(30) Priority Data:

62/778,935 13/12/2018 US

(74) Agent(s): Amica Law LLC

(51) International Patent Classification:

(54) Title of Invention: METHODS FOR IMPROVING EXERCISE TOLERANCE IN MYALGIC ENCEPHALOMYELITIS PATIENTS

(57) Abstract:

The present invention relates to methods for treating a subject with myalgic encephalomyelitis/chronic fatigue syndrome symptoms comprising administering a target subject a pharmaceutical composition comprising a therapeutic dsRNA (tdsRNA).

(No suitable figure to accompany the Abstract)

APPLICATIONS PUBLISHED UNDER SECTION 27 - cont'd

(12) SG PATENT APPLICATION

(13) A

(43) Publication Date: 31/01/2024

(21) Application No: 10202303426P

(71) Applicant(s): NATIONAL UNIVERSITY OF SINGAPORE

(22) Date of filing: 06/12/2021

(72) Inventor(s): LI, Zhi; SUNDARA SEKAR, Balaji; LUKITO, Benedict Ryan

(30) Priority Data:
10202012190X
07/12/2020
SINGAPORE

(74) Agent(s): MARKS & CLERK SINGAPORE LLP

(51) International Patent Classification:

(54) Title of Invention: BIOPRODUCTION OF ENANTIOPURE (R)- AND (S)-2-PHENYLGLYCINOL FROM STYRENE AND RENEWABLE FEEDSTOCKS VIA ARTIFICIAL ENZYME CASCADE

(57) Abstract:

The present invention relates to methods of bioproduction of enantiomerically pure or enantiomerically enriched 2- phenylglycinol or a derivative thereof by multiple enzyme-catalyzed chemical transformations in a one-pot reaction system. In a specific embodiment, at least one multiple enzyme is located on one or more plasmids or integrated in the chromosome of each of the one or more recombinant microbial cells. In a further embodiment, one or more recombinant microbial cells are genetically engineered to overexpress multiple enzymes, including styrene monooxygenase, epoxide hydrolase, alcohol dehydrogenase, transaminase, phenylalanine ammonia lyase, and phenylacrylic acid decarboxylase.

FIG. 1a-1c

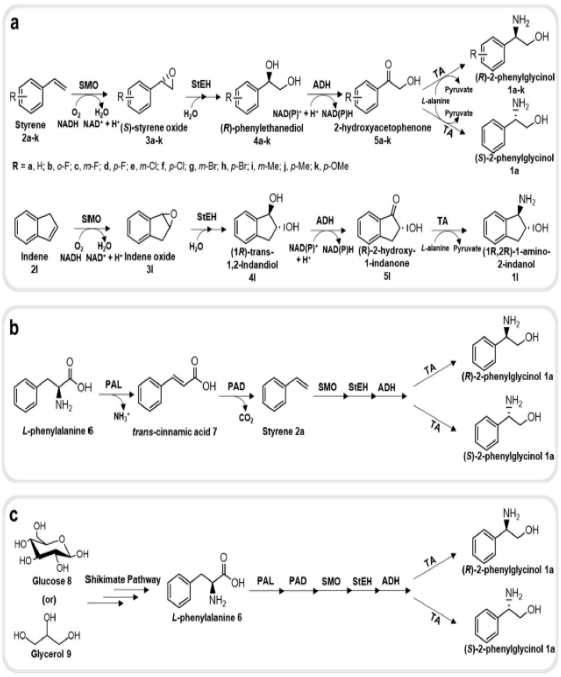

FIG. 1

APPLICATIONS PUBLISHED UNDER SECTION 27 - cont'd

(12) SG PATENT APPLICATION

(13) A

(43) Publication Date: 31/01/2024

(21) Application No: 10202303429T

(71) Applicant(s): VERILY LIFE SCIENCES LLC

(22) Date of filing: 24/07/2019

(72) Inventor(s): SHERIDAN, Martin; LIU, Jianyi; METLITZ, Matthew

(30) Priority Data:
62/703,085
25/07/2018
UNITED STATES OF AMERICA

16/520,017
23/07/2019
UNITED STATES OF AMERICA

(74) Agent(s): SPRUSON & FERGUSON (ASIA) PTE. LTD.

(51) International Patent Classification:

(54) Title of Invention: SYSTEMS AND METHODS FOR CONTINUOUS INSECT PUPAE SENSING

(57) Abstract:

Systems and methods for continuous insect pupae sensing are described. One example method includes receiving a flow at a singulator, the flow comprising one or more insect pupae; singulating the insect pupae into a single-file flow of insect pupae; sensing, using a sensor, insect pupae within the single-file flow of insect pupae; and incrementing a counter based on each sensed insect pupae in the single-file flow of insect pupae. One example system includes a channel defining a flow path for a flow of insect pupae; a singulator positioned within the flow path and arranged to receive the flow of insect pupae within the channel, the singulator configured to singulate the insect pupae into a single-file flow of insect pupae; a sensor positioned and arranged to sense insect pupae in the single-file flow; and a processor in communication with the sensor and a non-transitory computer-readable medium, the processor configured to execute processor-executable instructions stored in the non-transitory computer-readable medium to receive sensor signals from the sensor; and count a number of insect pupae based on the received sensor signals.

Fig. 3

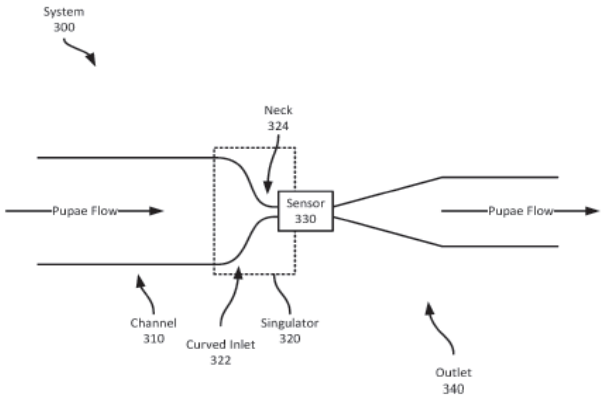

FIG. 3

APPLICATIONS PUBLISHED UNDER SECTION 27 - cont'd

(12) SG PATENT APPLICATION

(13) A

(43) Publication Date: 31/01/2024

(21) Application No: 10202303437W

(71) Applicant(s): MESO SCALE TECHNOLOGIES, LLC

(22) Date of filing: 23/12/2019

(72) Inventor(s): TUCKER-SCHWARTZ, Alexander K.; SIGAL, George

(30) Priority Data:

62/787,892 03/01/2019 US

(74) Agent(s): MARKS & CLERK SINGAPORE LLP

(51) International Patent Classification:

(54) Title of Invention: COMPOSITIONS AND METHODS FOR CARRYING OUT ASSAY MEASUREMENTS

(57) Abstract:

The present disclosure provides compositions, reagents, kits, systems, system components, and methods for performing assays. More particularly, the disclosure relates to an assay composition for detecting luminescence, which comprises an alkyl diethanolamine, for example, N-butyldiethanolamine (BDEA). In emodiments, the assay composition comprises 2-dibutylaminoethanol (BDAE).

Figure for publication: None

APPLICATIONS PUBLISHED UNDER SECTION 27 - cont'd

(12) SG PATENT APPLICATION

(13) A

(43) Publication Date: 31/01/2024

(21) Application No: 10202303438Y

(71) Applicant(s): HUAWEI TECHNOLOGIES CO., LTD.

(22) Date of filing: 13/06/2018

(72) Inventor(s): GONG, Zhengwei; MAAREF, Amine; AU, Kelvin Kar Kin; BALIGH, Mohammadhadi; XIAO, Weimin

(30) Priority Data:

62/521,259 16/06/2017 US

(74) Agent(s): Allen & Gledhill LLP

(51) International Patent Classification:

(54) Title of Invention: METHODS AND SYSTEMS OF POWER CONTROL FOR UPLINK TRANSMISSION

(57) Abstract:

A method for power control for uplink transmission is provided. In an embodiment, a method in a user equipment (UE) for reference signal (RS) relationship specific uplink (UL) transmission power control includes transmitting, by the UE, a first UL signal according to a first power control set including at least one of a first target power, a second target power, a DL reference signal (RS) for pathloss estimation, a pathloss compensation factor, and a transmit power command (TPC). The first power control set is determined according to a first RS relationship between one first RS and a first UL signal.

Fig. 1

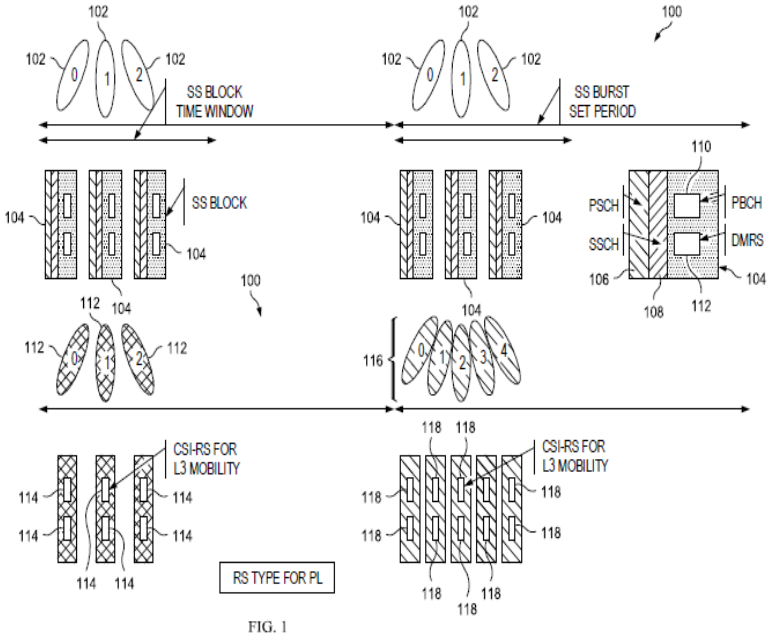

FIG. 1

APPLICATIONS PUBLISHED UNDER SECTION 27 - cont'd

(12) SG PATENT APPLICATION

(13) A

(43) Publication Date: 31/01/2024

(21) Application No: 10202303442T

(71) Applicant(s): SHIRE HUMAN GENETIC THERAPIES, INC.;ETHRIS GMBH

(22) Date of filing: 14/03/2014

(72) Inventor(s): HEARTLEIN, Michael; GUILD, Braydon, Charles; DEROSA, Frank; RUDOLPH, Carsten; PLANK, Christian; SMITH, Lianne

(30) Priority Data:

61/783,663 14/03/2013 US

(74) Agent(s): SPRUSON & FERGUSON (ASIA) PTE. LTD.

(51) International Patent Classification:

(54) Title of Invention: CFTR MRNA COMPOSITIONS AND RELATED METHODS AND USES

(57) Abstract:

Materials, formulations, production methods, and methods for delivery of CFTR mRNA for induction of CFTR expression, including in the mammalian lung are provided. The present invention is particularly useful for treating cystic fibrosis.

No suitable figures.

APPLICATIONS PUBLISHED UNDER SECTION 27 - cont'd

(12) SG PATENT APPLICATION

(13) A

(43) Publication Date: 31/01/2024

(21) Application No: 10202303443U

(71) Applicant(s): ABIOMED, INC.

(22) Date of filing: 08/12/2021

(72) Inventor(s): ALMEDHYCHY, Ali, Hassan; CHAKRABARTI, Anjan, K.

(30) Priority Data:

63/123,576 10/12/2020 US

(74) Agent(s): DAVIES COLLISON CAVE ASIA PTE. LTD.

(51) International Patent Classification:

(54) Title of Invention: SYSTEMS AND METHODS FOR DETERMINING POSITIONING OF INTRACARDIAC DEVICES

(57) Abstract:

Systems and methods for determining the positioning of intracardiac devices, such as intracardiac blood pump assemblies, using electrical sensors configured to sense electrical potential as it propagates through the heart. In one example, the present technology provides an intracardiac device (100, 200, 506, 602) with one or more electrical sensors (508a, 510a, 606, 706) mounted thereon, and a controller (302) configured to determine the absolute or relative location of the intracardiac device based on the timing, shape, and/or amplitude of the electrical signals received from the one or more sensors.

[Fig. 7]

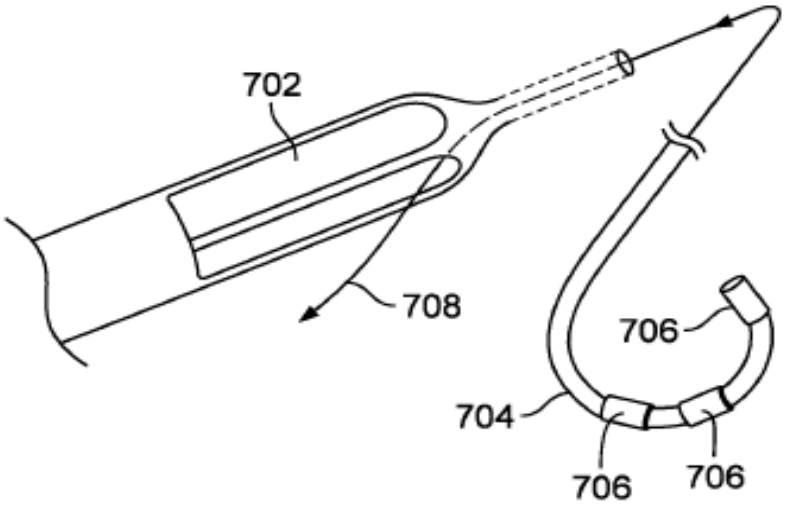

FIG. 7

APPLICATIONS PUBLISHED UNDER SECTION 27 - cont'd

(12) SG PATENT APPLICATION

(13) A

(43) Publication Date: 31/01/2024

(21) Application No: 10202303446R

(71) Applicant(s): TONIX PHARMA HOLDINGS LIMITED

(22) Date of filing: 11/12/2018

(72) Inventor(s): HARRIS, Herbert, W.; LEDERMAN, Seth

(30) Priority Data:

62/597,284 11/12/2017 US

(74) Agent(s): Henry Goh (S) Pte Ltd

(51) International Patent Classification:

(54) Title of Invention: CYCLOBENZAPRINE TREATMENT FOR AGITATION, PSYCHOSIS AND COGNITIVE DECLINE IN DEMENTIA AND NEURODEGENERATIVE CONDITIONS

(57) Abstract:

Compositions comprising cyclobenzaprine, and methods for the treatment or prevention of agitation, psychosis and/or cognitive decline and associated symptoms thereof in dementia and other neurodegenerative conditions.

Figure: None

APPLICATIONS PUBLISHED UNDER SECTION 27 - cont'd

(12) SG PATENT APPLICATION

(13) A

(43) Publication Date: 31/01/2024

(21) Application No: 10202303447P

(71) Applicant(s): NOVARTIS AG

(72) Inventor(s): KASPAR, Brian K.; HATFIELD, James Michael; BALLEYDIER, Joseph; KASPAR, Allan Arman; HODGE, Robert Emil

(30) Priority Data: 62/583,035 08/11/2017 UNITED STATES OF AMERICA

(74) Agent(s): DREW & NAPIER LLC

(51) International Patent Classification:

(54) Title of Invention: MEANS AND METHOD FOR PREPARING VIRAL VECTORS AND USES OF SAME

(57) Abstract:

Methods for preparing and purifying viral particles, and compositions and uses comprising the same, are provided.

[Figure 5]

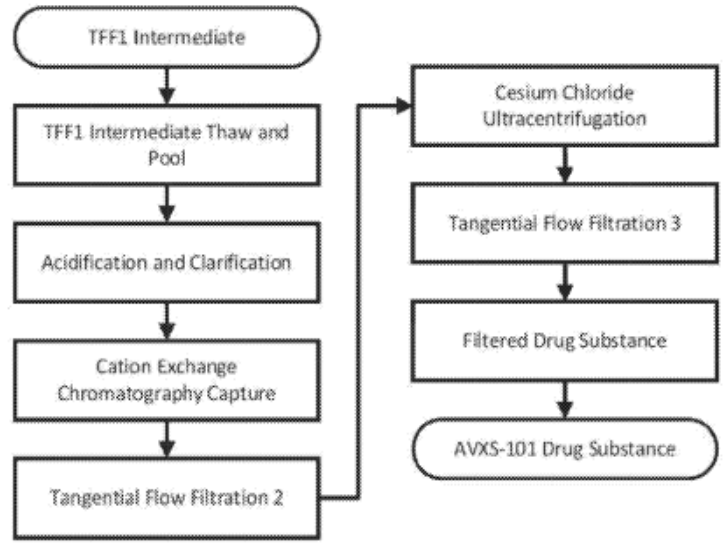

Figure 5

APPLICATIONS PUBLISHED UNDER SECTION 27 - cont'd

(12) SG PATENT APPLICATION

(13) A

(43) Publication Date: 31/01/2024

(21) Application No: 10202303454X

(71) Applicant(s): RUBEDO LIFE SCIENCES, INC.

(22) Date of filing: 11/07/2019

(72) Inventor(s): GALLOP, Mark A.; QUARTA, Marco; KLEIN, Julian

(30) Priority Data:
62/696,486
11/07/2018
UNITED STATES OF AMERICA

(74) Agent(s): DAVIES COLLISON CAVE ASIA PTE. LTD.

(51) International Patent Classification:

(54) Title of Invention: SENOLYTIC COMPOSITIONS AND USES THEREOF

(57) Abstract:

Provided herein are senolytic agents for selectively killing senescent cells that are associated with numerous pathologies and diseases, including age-related pathologies and diseases. As disclosed herein, senescent cell-associated diseases and disorders may be treated or prevented by administering at least one senolytic agent or pharmaceutical compositions thereof. The senescent cell-associated diseases or disorders treated or prevented by the methods described herein include, but are not limited to, cardiovascular diseases or disorders, cardiovascular diseases and disorders associated with arteriosclerosis, such as atherosclerosis, idiopathic pulmonary fibrosis (IPF), chronic obstructive pulmonary disease (COPD), osteoarthritis, inflammatory diseases or disorders, autoimmune diseases or disorders, pulmonary diseases or disorders, neurological diseases or disorders, dermatological diseases or disorders, chemotherapeutic side effects, radiotherapy side effects, metastasis and metabolic diseases.

[Figure 5C]

FIG. 5C

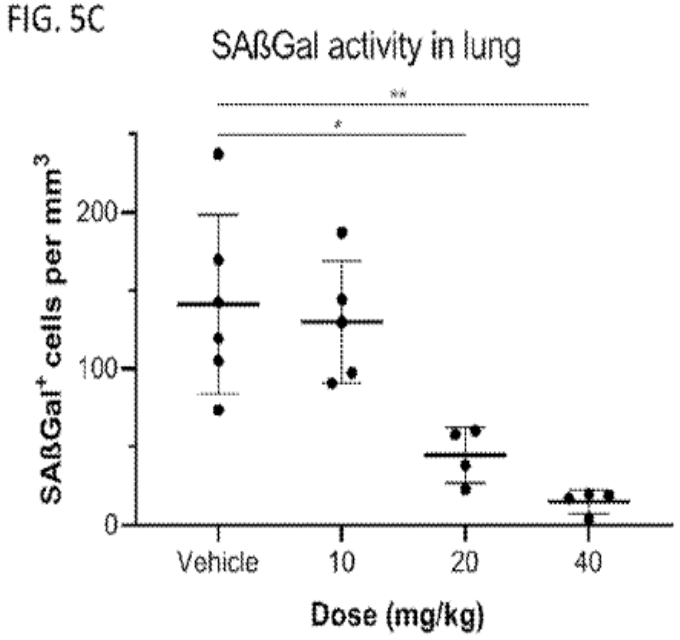

APPLICATIONS PUBLISHED UNDER SECTION 27 - cont'd

(12) SG PATENT APPLICATION

(13) A

(43) Publication Date: 31/01/2024

(21) Application No: 10202303461S

(71) Applicant(s): VOYAGER THERAPEUTICS, INC.

(22) Date of filing: 15/12/2021

(72) Inventor(s): KURELLA, Vinodhbabu; LIU, Li; KAVANAGH, Dillon; CAPILI, Allan, D.; HOU, Jinzhao; CARTER, Todd; LIU, Wencheng

(30) Priority Data:

63/126,024 16/12/2020 US

(74) Agent(s): DREW & NAPIER LLC

(51) International Patent Classification:

(54) Title of Invention: TAU BINDING COMPOUNDS

(57) Abstract:

The present disclosure provides anti-tau antibodies. Also provided are methods of using anti-tau antibodies for treatment and diagnosis of neurological indications.

[No Figure]

APPLICATIONS PUBLISHED UNDER SECTION 27 - cont'd

(12) SG PATENT APPLICATION

(13) A

(43) Publication Date: 31/01/2024

(21) Application No: 10202303468T

(71) Applicant(s): VISA INTERNATIONAL SERVICE ASSOCIATION

(22) Date of filing: 12/06/2019

(72) Inventor(s): GUPTA, Anurag

(30) Priority Data:

(74) Agent(s): SHOOK LIN & BOK LLP

(51) International Patent Classification:

(54) Title of Invention: SYSTEM AND METHOD FOR AUTHORIZING A TRANSACTION

(57) Abstract:

A method, system, and computer program product is provided for authorizing a transaction. The method includes registering, with a first merchant system associated with a first merchant, a second merchant system associated with a second merchant, receiving, from the second merchant system, user data associated with a user requesting a transaction through the second merchant system, determining, with the first merchant system, a user profile for the user based on the user data, the user profile stored on a data storage device that is not accessible to the second merchant system, the user profile including an account identifier, obtaining, with the first merchant system, a transaction token generated based on the account identifier, and transmitting, to the second merchant system, the transaction token.

<Figure 1>

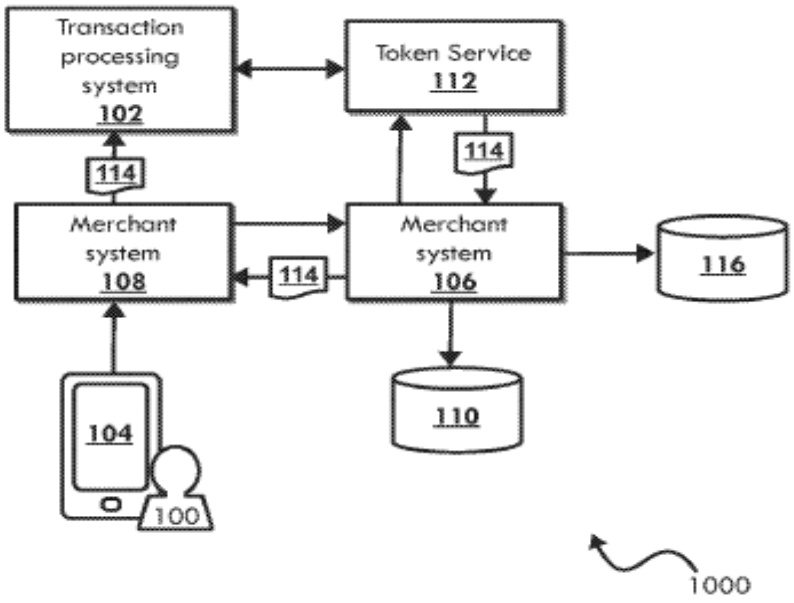

FIG. 1

APPLICATIONS PUBLISHED UNDER SECTION 27 - cont'd

(12) SG PATENT APPLICATION

(13) A

(43) Publication Date: 31/01/2024

(21) Application No: 10202303469R

(71) Applicant(s): SERVATUS LTD

(22) Date of filing: 08/12/2021

(72) Inventor(s): FINLAYSON, Wayne

(30) Priority Data:

2020904573 09/12/2020 AU

(74) Agent(s): DAVIES COLLISON CAVE ASIA PTE. LTD.

(51) International Patent Classification:

(54) Title of Invention: COMBINATION THERAPY FOR INFLAMMATORY DISORDERS OF THE JOINTS

(57) Abstract:

Disclosed herein are methods for treating inflammatory disorders of the joints, optionally rheumatoid arthritis, or at least one symptom thereof, comprising administering to a subject in need thereof an effective amount of: an immunosuppressant; and one or more *Lactobacillus* species selected from *Lactobacillus buchneri*, *Lactobacillus paracasei*, *Lactobacillus zeae*, *Lactobacillus rapi*, *Lactobacillus parafarraginis*, and *Lactobacillus diolivorans*, and/or a culture supernatant or cell free filtrate derived from culture media in which said one or more *Lactobacillus* species has been cultured. In particular embodiments, the method comprises the administration of a combination of an immunosuppressant, *Lactobacillus buchneri*, *Lactobacillus paracasei* and *Lactobacillus zeae*.

[No suitable figure]

APPLICATIONS PUBLISHED UNDER SECTION 27 - cont'd

(12) SG PATENT APPLICATION

(13) A

(43) Publication Date: 31/01/2024

(21) Application No: 10202303471P

(71) Applicant(s): SAREPTA THERAPEUTICS, INC.;THE UNITED STATES OF AMERICA, AS REPRESENTED BY THE SECRETARY, DEPT. OF HEALTH AND HUMAN SERVICES;UNIVERSITY OF MARYLAND;THE PROGERIA RESEARCH FOUNDATION

(22) Date of filing: 28/04/2017

(72) Inventor(s): ERDOS, Michael R.; CAO, Kan; KOLE, Ryszard; BESTWICK, Richard Keith; COLLINS, Francis S.; GORDON, Leslie B.

(30) Priority Data:

62/330,027 29/04/2016 US

(74) Agent(s): DREW & NAPIER LLC

(51) International Patent Classification:

(54) Title of Invention: OLIGONUCLEOTIDE ANALOGUES TARGETING HUMAN LMNA

(57) Abstract:

Provided are LMNA-targeted antisense oligonucleotides for reducing expression of one or more aberrantly spliced LMNA mRNA isoforms that encode progerin.

FIG. 1

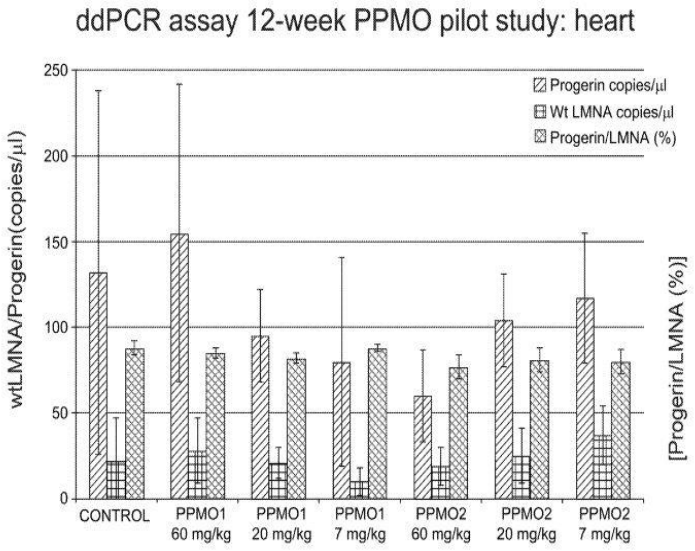

FIG. 1

APPLICATIONS PUBLISHED UNDER SECTION 27 - cont'd

(12) SG PATENT APPLICATION

(13) A

(43) Publication Date: 31/01/2024

(21) Application No: 10202303472Y

(71) Applicant(s): THE TRUSTEES OF THE UNIVERSITY OF PENNSYLVANIA

(22) Date of filing: 01/12/2021

(72) Inventor(s): WILSON, James, M.; SIMS, Joshua, Joyner; YUAN, Yuan

(30) Priority Data:

63/119,863 01/12/2020 US

(74) Agent(s): MARKS & CLERK SINGAPORE LLP

(51) International Patent Classification:

(54) Title of Invention: NOVEL COMPOSITIONS WITH TISSUE-SPECIFIC TARGETING MOTIFS AND COMPOSITIONS CONTAINING SAME

(57) Abstract:

Provided herein are compositions including targeting peptides linked thereto or inserted in a targeting protein of a recombinant vector having at least one exogenous peptide comprising an amino acid sequence of N- x- (T/I/V/A)- (K/R) (SEQ ID NO: 47). Compositions providing such conjugates, targeting peptides, or recombinant vectors having a mutant capsid or envelope protein are provided as are uses thereof.

Figure for publication: None

APPLICATIONS PUBLISHED UNDER SECTION 27 - cont'd

(12) SG PATENT APPLICATION

(13) A

(43) Publication Date: 31/01/2024

(21) Application No: 10202303481W

(71) Applicant(s): INHIBRX, INC.

(22) Date of filing: 11/01/2017

(72) Inventor(s): ECKELMAN, Brendan P.; TIMMER, John C.; HATA, Chelsie; JONES, Kyle S.; HUSSAIN, Abrahim; RAZAI, Amir S.; BECKLUND, Bryan; PANDIT, Rajay; KAPLAN, Mike; RASCON, LUCAS; DEVERAUX, Quinn

(30) Priority Data:
62/277,027
11/01/2016
UNITED STATES OF AMERICA

(74) Agent(s): SPRUSON & FERGUSON (ASIA) PTE. LTD.

(51) International Patent Classification:

(54) Title of Invention: MULTIVALENT AND MULTISPECIFIC OX40-BINDING FUSION PROTEINS

(57) Abstract:

This invention relates generally to molecules that specifically engage OX40, a member of the TNF receptor superfamily (TNFRSF). More specifically this invention relates to multivalent and multispecific molecules that bind at least OX40.

(FIG 5A)

FIG 5A

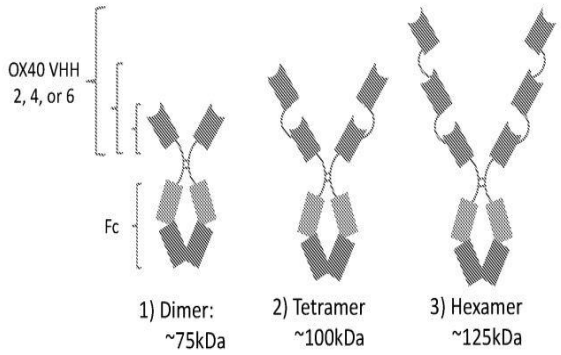

APPLICATIONS PUBLISHED UNDER SECTION 27 - cont'd

(12) SG PATENT APPLICATION

(13) A

(43) Publication Date: 31/01/2024

(21) Application No: 10202303488R

(71) Applicant(s): GENZYME CORPORATION

(22) Date of filing: 21/12/2018

(72) Inventor(s): JOSEPH, Alexandra;TRAN, Johnson;RICHARDS, Susan M.

(30) Priority Data:

62/609,986 22/12/2017 US

(74) Agent(s): MIRANDAH ASIA (SINGAPORE) PTE LTD

(51) International Patent Classification:

(54) Title of Invention: BIOMARKERS OF METHOTREXATE-INDUCED IMMUNE TOLERANCE

(57) Abstract:

The present application provides methods of treating a disease, such as Pompe disease, in a subject, comprising detecting an erythropoiesis biomarker in a sample of the subject after administration of methotrexate and a therapeutic agent to the subject, and administering further treatment with or without concurrently administering additional immune tolerance induction or immunosuppression therapy based on the level of the erythropoiesis biomarker. Further provided by the present application are methods and kits for assessing the level of immune tolerance to a therapeutic agent in a subject based on detection of an erythropoiesis biomarker after administration of methotrexate and the therapeutic agent to the subject.

[NO FIGURE]

APPLICATIONS PUBLISHED UNDER SECTION 27 - cont'd

(12) SG PATENT APPLICATION

(13) A

(43) Publication Date: 31/01/2024

(21) Application No: 10202303489V

(71) Applicant(s): ENTEGRIS, INC.

(22) Date of filing: 08/07/2020

(72) Inventor(s): ERMERT, David M.; WRIGHT, JR., Robert; BAUM, Thomas H.; HENDRIX, Bryan C.

(30) Priority Data:
62/871,956
09/07/2019
UNITED STATES OF AMERICA

(74) Agent(s): VIERING, JENTSCHURA & PARTNER LLP

(51) International Patent Classification:

(54) Title of Invention: OXYHALIDE PRECURSORS

(57) Abstract:

The invention provides a process for preparing molybdenum and tungsten oxyhalide compounds which are useful in the deposition of molybdenum and tungsten containing films on various surfaces of microelectronic devices. In the process of the invention, a molybdenum or tungsten trioxide is heated in either a solid state medium or in a melt-phase reaction comprising a eutectic blend comprising alkaline and/or alkaline earth metal salts. The molybdenum or tungsten oxyhalides thus formed may be isolated as a vapor and crystallized to provide highly pure precursor compounds such as MoO_2Cl_2.

FIGURE 1

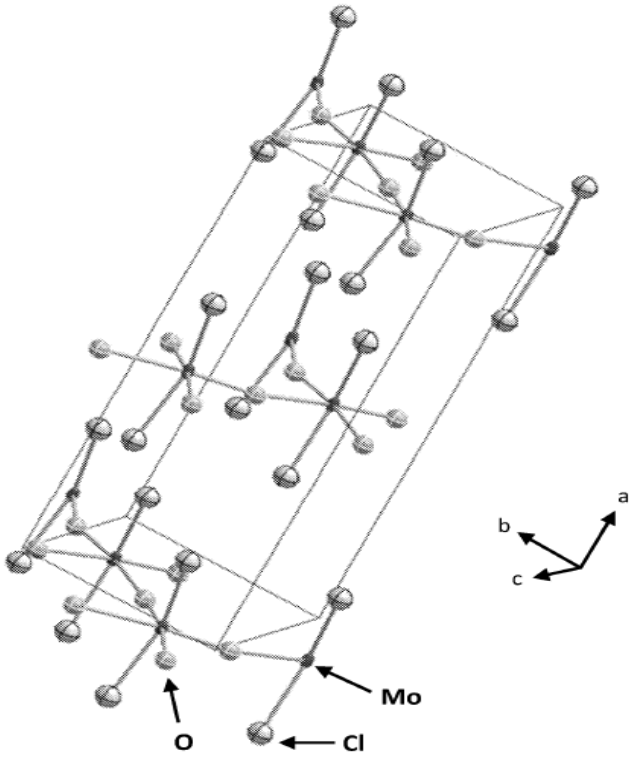

FIGURE 1

APPLICATIONS PUBLISHED UNDER SECTION 27 - cont'd

(12) SG PATENT APPLICATION

(13) A

(43) Publication Date: 31/01/2024

(21) Application No: 10202303491Q

(22) Date of filing: 05/01/2018

(71) Applicant(s): ILLUMINA, INC.

(72) Inventor(s): WU, Kevin; ZHAO, Chen; CHUANG, Han-Yu; SO, Alex; TANNER, Stephen; GROSS, Stephen M.

(30) Priority Data:
62/447,851
18/01/2017
UNITED STATES OF AMERICA

(74) Agent(s): MARKS & CLERK SINGAPORE LLP

(51) International Patent Classification:

(54) Title of Invention: METHODS AND SYSTEMS FOR GENERATION AND ERROR-CORRECTION OF UNIQUE MOLECULAR INDEX SETS WITH HETEROGENEOUS MOLECULAR LENGTHS

(57) Abstract:

The disclosed embodiments concern methods, apparatus, systems and computer program products for determining sequences of interest using unique molecular index sequences that are uniquely associable with individual polynucleotide fragments, including sequences with low allele frequencies and long sequence length. In some implementations, the unique molecular index sequences include variable-length nonrandom sequences. In some implementations, the unique molecular index sequences are associated with the individual polynucleotide fragments based on alignment scores indicating similarity between the unique molecular index sequences and subsequences of sequence reads obtained from the individual polynucleotide fragments. System, apparatus, and computer program products are also provided for determining a sequence of interest implementing the methods disclosed.

Figure 1C

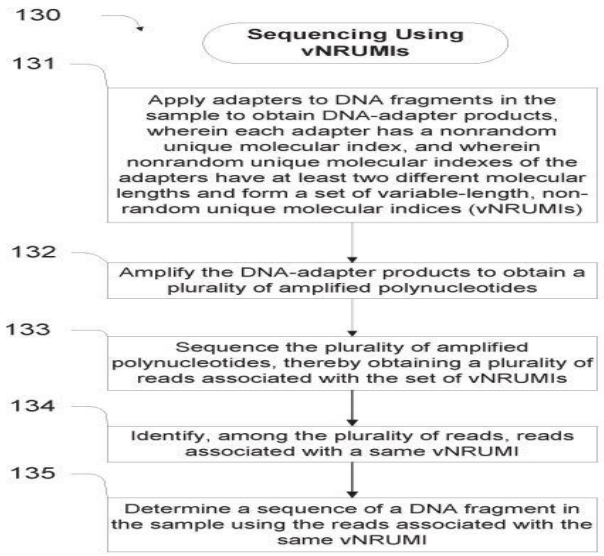

Figure 1C

APPLICATIONS PUBLISHED UNDER SECTION 27 - cont'd

(12) SG PATENT APPLICATION

(13) A

(43) Publication Date: 31/01/2024

(21) Application No: 10202303494P

(71) Applicant(s): Grand Advance Technologies Pte Ltd

(22) Date of filing: 07/05/2021

(72) Inventor(s): Ng Lee Huat

(30) Priority Data:

(74) Agent(s): YUSARN AUDREY LLC

(51) International Patent Classification:

(54) Title of Invention: MICROPARTICLES/MICROCROWN

(57) Abstract:

The application provides a method of producing a microparticle.

The method includes a step of providing a mould assembly, which comprises two moulds that comprise an upper mould and a lower mould. The mould assembly is then positioned in a closed position such that the two moulds define a micro-cavity to exert pressure on a moulding material within the micro-cavity to form the moulding material into a microparticle. After this, the mould assembly is positioned in an open position, wherein the microparticle adheres to one of the two moulds of the mould assembly.

(Fig. 3)

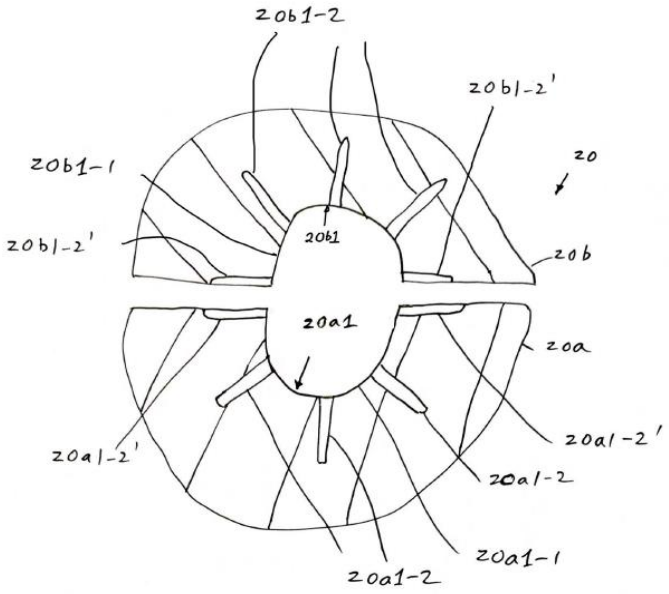

FIG. 3

APPLICATIONS PUBLISHED UNDER SECTION 27 - cont'd

(12) SG PATENT APPLICATION

(13) A

(43) Publication Date: 31/01/2024

(21) Application No: 10202303508Q

(71) Applicant(s): QUALCOMM INCORPORATED

(22) Date of filing: 12/06/2020

(72) Inventor(s): NALCI, Alican; EGILMEZ, Hilmi Enes; SEREGIN, Vadim; COBAN, Muhammed Zeyd; KARCZEWICZ, Marta

(30) Priority Data:

62/861,828 14/06/2019 US

62/868,346 28/06/2019 US

16/899,063 11/06/2020 US

(74) Agent(s): DREW & NAPIER LLC

(51) International Patent Classification:

(54) Title of Invention: TRANSFORM AND LAST SIGNIFICANT COEFFICIENT POSITION SIGNALING FOR LOW-FREQUENCY NON-SEPARABLE TRANSFORM IN VIDEO CODING

(57) Abstract:

A video decoder determines, based on a block size of a current block and a low-frequency non-separable transform (LFNST) syntax element, a zero-out pattern of normatively defined zero-coefficients. The LFNST syntax element is signaled at a transform unit (TU) level. Additionally, the video decoder determines transform coefficients of the current block. The transform coefficients of the current block include transform coefficients in an LFNST region of the current block and transform coefficients outside the LFNST region of the current block. As part of determining the transform coefficients of the current block, the video decoder applies an inverse LFNST to determine values of one or more transform coefficients in the LFNST region of the current block. The video decoder also determines that transform coefficients of the current block in a region of the current block defined by the zero-out pattern are equal to 0.

Fig. 13

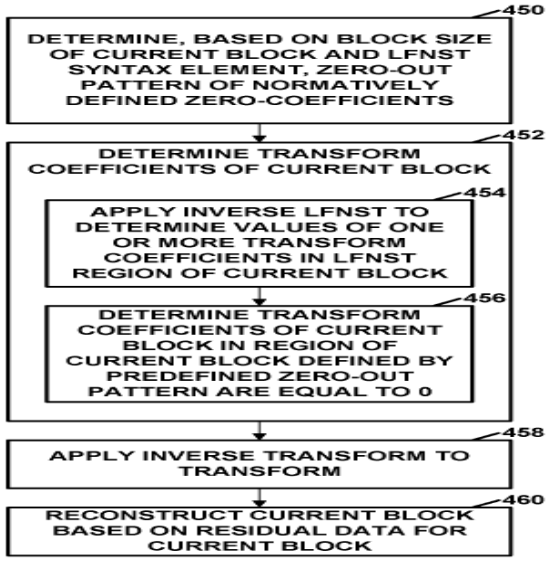

FIG. 13

APPLICATIONS PUBLISHED UNDER SECTION 27 - cont'd

(12) SG PATENT APPLICATION

(13) A

(43) Publication Date: 31/01/2024

(21) Application No: 10202303511S

(71) Applicant(s): AEROCORE TECHNOLOGIES LLC

(22) Date of filing: 02/10/2014

(72) Inventor(s): SAENZ, Jorge, Ivan

(30) Priority Data:

61/885,777 02/10/2013 US

61/900,749 06/11/2013 US

(74) Agent(s): SPRUSON & FERGUSON (ASIA) PTE. LTD.

(51) International Patent Classification:

(54) Title of Invention: CLEANING METHOD FOR JET ENGINE

(57) Abstract:

Turbines and associated equipment are normally cleaned via water or chemical pressure washing via a mist, spray systems. However, these systems fail to reach deep across the gas path to remove fouling materials. Various embodiments herein pertain to apparatus and methods that utilize the water and existing chemicals to generate a foam. The foam can be introduced at that gas-path entrance of the equipment, where it contacts the stages and internal surfaces, to contact, scrub, carry, and remove fouling away from equipment to restore performance.

[Fig. 18A]

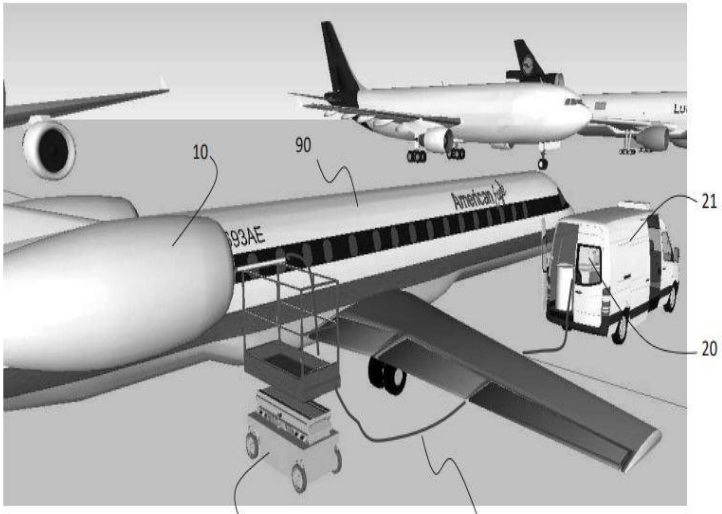

FIG. 18A

APPLICATIONS PUBLISHED UNDER SECTION 27 - cont'd

(12) SG PATENT APPLICATION

(13) A

(43) Publication Date: 31/01/2024

(21) Application No: 10202303514U

(71) Applicant(s): IMMATICS BIOTECHNOLOGIES GMBH

(22) Date of filing: 17/09/2019

(72) Inventor(s): SONG, Colette; SCHUSTER, Heiko; KOWALEWSKI, Daniel; SCHOOR, Oliver; FRITSCHE, Jens; WEINSCHENK, Toni; SINGH, Harpreet

(30) Priority Data:
10 2018 122 623.3
17/09/2018
GERMANY

62/732,300
17/09/2018
UNITED STATES OF AMERICA

(74) Agent(s): DREW & NAPIER LLC

(51) International Patent Classification:

(54) Title of Invention: B*44 RESTRICTED PEPTIDES FOR USE IN IMMUNOTHERAPY AGAINST CANCERS AND RELATED METHODS

(57) Abstract:

The present invention relates to peptides, proteins, nucleic acids and cells for use in immunotherapeutic methods. In particular, the present invention relates to the immunotherapy of cancer. The present invention furthermore relates to tumor-associated T-cell peptide epitopes, alone or in combination with other tumor-associated peptides that can for example serve as active pharmaceutical ingredients of vaccine compositions that stimulate anti-tumor immune responses, or to stimulate T cells ex vivo and transfer into patients. Peptides bound to molecules of the major histocompatibility complex (MHC), or peptides as such, can also be targets of antibodies, soluble T-cell receptors, and other binding molecules.

[No Suitable Figure]

APPLICATIONS PUBLISHED UNDER SECTION 27 - cont'd

(12) SG PATENT APPLICATION

(13) A

(43) Publication Date: 31/01/2024

(21) Application No: 10202303518T

(71) Applicant(s): MEXICHEM FLUOR S.A. DE C.V.

(22) Date of filing: 14/08/2019

(72) Inventor(s): LOW, Robert E

(30) Priority Data:

1813237.3	14/08/2018	GB
1901885.2	11/02/2019	GB

(74) Agent(s): ADASTRA INTELLECTUAL PROPERTY PTE. LTD.

(51) International Patent Classification:

(54) Title of Invention: REFRIGERANT COMPOSITION AND USE THEREOF

(57) Abstract:

Use as a refrigerant in a heat pump system in an electric vehicle of a composition is described. The composition comprises 1,1-difluoroethylene (R-1132a) and at least one fluorocarbon refrigerant compound selected from the group consisting of 2,3,3,3-tetrafluoropropene (R-1234yf), difluoromethane (R-32), 1,3,3,3-tetrafluoropropene (R-1234ze(E)) and 1,1-difluoroethane (R-152a).

Figure 1

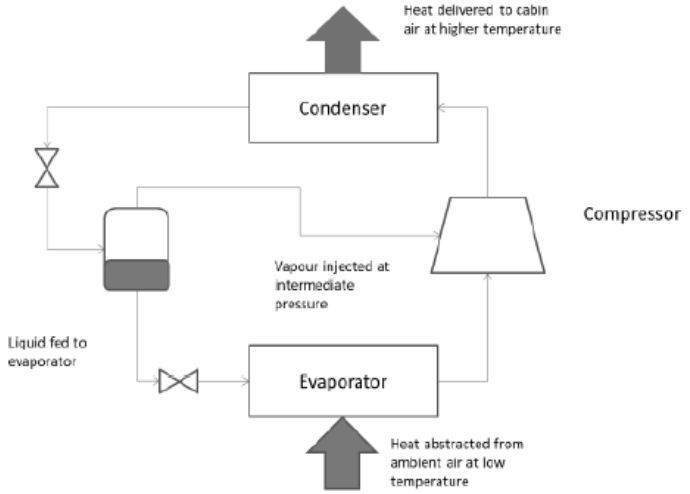

Figure 1

APPLICATIONS PUBLISHED UNDER SECTION 27 - cont'd

(12) SG PATENT APPLICATION

(13) A

(43) Publication Date: 31/01/2024

(21) Application No: 10202303531R

(71) Applicant(s): Bristol-Myers Squibb Company

(22) Date of filing: 02/11/2017

(72) Inventor(s): VU, Minh Diem; STREIN, Klaus; PAIVA, Bruno David Lourenço; SAN MIGUEL IZQUIERDO, Jesús Fernando

(30) Priority Data:

16196874.8 02/11/2016 EP

(74) Agent(s): MIRANDAH ASIA (SINGAPORE) PTE LTD

(51) International Patent Classification:

(54) Title of Invention: BISPECIFIC ANTIBODY AGAINST BCMA AND CD3 AND AN IMMUNOLOGICAL DRUG FOR COMBINED USE IN TREATING MULTIPLE MYELOMA

(57) Abstract:

The invention relates to a bispecific antibody specifically binding to human B cell maturation antigen (BCMA) and to human CD3ε (CD3) together with an immunotherapeutic drug for combined use in treating multiple myeloma.

[Figure 21]

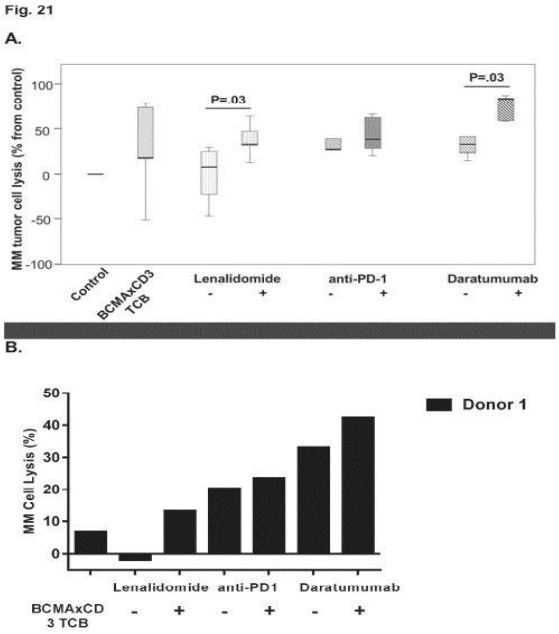

APPLICATIONS PUBLISHED UNDER SECTION 27 - cont'd

(12) SG PATENT APPLICATION

(13) A

(43) Publication Date: 31/01/2024

(21) Application No: 10202303534X

(71) Applicant(s): GINKGO BIOWORKS, INC.

(22) Date of filing: 20/03/2020

(72) Inventor(s): MCCOY, Daniel; BERRY, Garrett E.

(30) Priority Data:

62/821,710 21/03/2019 US

(74) Agent(s): SPRUSON & FERGUSON (ASIA) PTE. LTD.

(51) International Patent Classification:

(54) Title of Invention: RECOMBINANT ADENO-ASSOCIATED VIRUS VECTORS

(57) Abstract:

AAV capsid proteins comprising a modification in the amino acid sequence and virus vectors comprising the modified AAV capsid protein are described. Also described are methods of administering the virus vectors and virus capsids to a cell or to a subject in vivo.

[No Fig.]

APPLICATIONS PUBLISHED UNDER SECTION 27 - cont'd

(12) SG PATENT APPLICATION

(13) A

(43) Publication Date: 31/01/2024

(21) Application No: 10202303536Q

(71) Applicant(s): REGENERON PHARMACEUTICALS, INC.

(22) Date of filing: 15/03/2019

(72) Inventor(s): RIEHLMAN, Timothy; CARREAU, Gabriel; SCHNEIDERHEINZE, Jeffrey; NALL, Nicole, M.

(30) Priority Data:

62/644,933	19/03/2018	US

(74) Agent(s): MIRANDAH ASIA (SINGAPORE) PTE LTD

(51) International Patent Classification:

(54) Title of Invention: MICROCHIP CAPILLARY ELECTROPHORESIS ASSAYS AND REAGENTS

(57) Abstract:

MCE assays and reagents to assess purity and to identify impurities in protein drug product samples are provided. Methods for analyzing analytes in a protein drug sample are provided.

[Figure 1A]

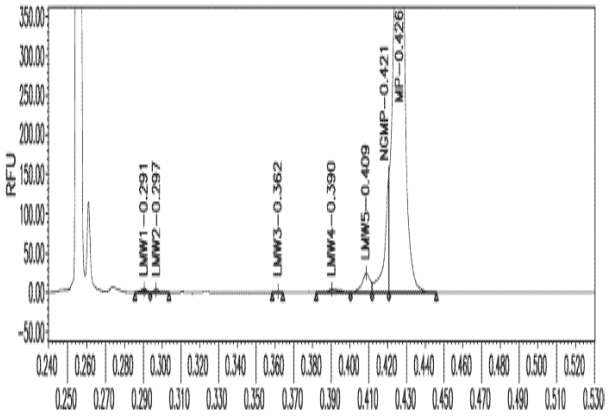

FIG.1A

APPLICATIONS PUBLISHED UNDER SECTION 27 - cont'd

(12) SG PATENT APPLICATION

(13) A

(43) Publication Date: 31/01/2024

(21) Application No: 10202303538U

(71) Applicant(s): AVM BIOTECHNOLOGY, LLC

(22) Date of filing: 14/11/2019

(72) Inventor(s): DEISHER, Theresa;JARZYNA, Adalbert;DUNCAN, Iain

(30) Priority Data:

62/767,448 14/11/2018 US

(74) Agent(s): VIERING, JENTSCHURA & PARTNER LLP

(51) International Patent Classification:

(54) Title of Invention: STABLE GLUCOCORTICOID FORMULATION

(57) Abstract:

This invention relates to aqueous pharmaceutical formulations comprising a glucocorticoid. These have been formulated to contain high concentrations of glucocorticoid and reduced levels of preservatives.

Figure 1

Figure 1

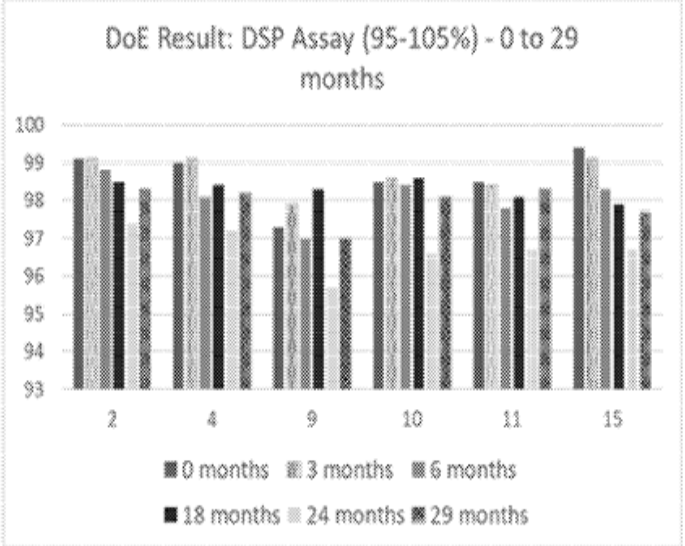

APPLICATIONS PUBLISHED UNDER SECTION 27 - cont'd

(12) SG PATENT APPLICATION

(13) A

(43) Publication Date: 31/01/2024

(21) Application No: 10202303541P

(71) Applicant(s): BEAM THERAPEUTICS INC.

(22) Date of filing: 13/02/2020

(72) Inventor(s): GAUDELLI, Nicole; PACKER, Michael; SLAYMAKER, Ian; YU, Yi; ZETSCHE, Bernd; BORN, David A.; LEE, Seung-Joo; GEHRKE, Jason M.

(30) Priority Data:

62/805,271 13/02/2019 US

62/852,228 23/05/2019 US

62/852,224 23/05/2019 US

62/931,722 06/11/2019 US

62/941,569 27/11/2019 US

62/941,523 27/11/2019 US

62/966,526 27/01/2020 US

(74) Agent(s): PIZZEYS PTE. LTD.

(51) International Patent Classification:

(54) Title of Invention: MODIFIED IMMUNE CELLS HAVING ADENOSINE DEAMINASE BASE EDITORS FOR MODIFYING A NUCLEOBASE IN A TARGET SEQUENCE

(57) Abstract:

The present invention features genetically modified immune cells comprising novel adenosine base editors (*e.g.*, ABE8) having enhanced anti-neoplasia activity, resistance to immune suppression, and decreased risk of eliciting a graft-versus-host reaction or host-versus-graft reaction, or a combination thereof. The present invention also features methods for producing and using these modified immune effector cells.

FIG. 1A

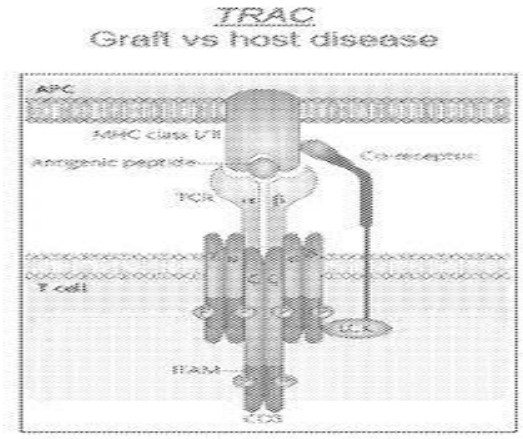

FIG. 1A

APPLICATIONS PUBLISHED UNDER SECTION 27 - cont'd

(12) SG PATENT APPLICATION

(13) A

(43) Publication Date: 31/01/2024

(21) Application No: 10202303544Q

(71) Applicant(s): YANGTZE MEMORY TECHNOLOGIES CO., LTD.

(22) Date of filing: 27/07/2018

(72) Inventor(s): LIU, Jun; HUO, Zongliang; XIAO, Lihong; LU, Zhenyu; TAO, Qian; HU, Yushi; LI, Sizhe; TANG, Zhaohui; ZHOU, Yuting; LI, Zhaosong

(30) Priority Data:

(74) Agent(s): YUSARN AUDREY LLC

(51) International Patent Classification:

(54) Title of Invention: MULTIPLE-STACK THREE-DIMENSIONAL MEMORY DEVICE AND FABRICATION METHOD THEREOF

(57) Abstract:

Methods and structures of a three-dimensional memory device are disclosed. In an example, the memory device includes a first staircase structure and a second staircase structure over the first staircase structure, each of the first staircase structure and the second staircase structure comprises alternately stacked conductor layers and insulating layers. The memory device can also include a first channel structure extending through the first staircase structure, a second channel structure extending through the second staircase structure and is connected with the first channel structure, a diameter of the top of the first channel structure is greater than that of the bottom of the second channel structure, and a supporting pillar extending through the first staircase structure and the second staircase structure, the supporting pillar comprises a metal layer.

FIG. 6

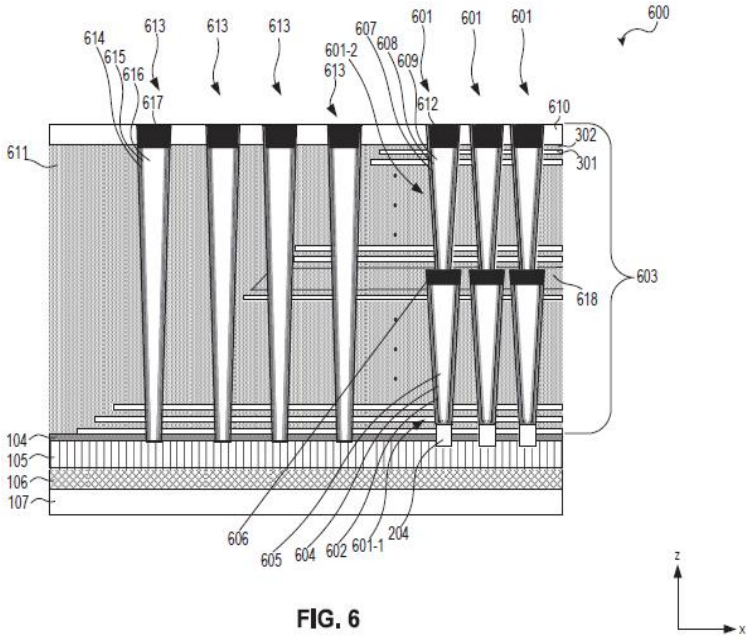

FIG. 6

APPLICATIONS PUBLISHED UNDER SECTION 27 - cont'd

(12) SG PATENT APPLICATION

(13) A

(43) Publication Date: 31/01/2024

(21) Application No: 10202303546T

(71) Applicant(s): DYNE THERAPEUTICS, INC.

(22) Date of filing: 30/12/2021

(72) Inventor(s): SUBRAMANIAN, Romesh, R.; WEEDEN, Timothy; DESJARDINS, Cody, A.; ZANOTTI, Stefano; TANG, Kim; QATANANI, Mohammed, T.; QUINN, Brendan; NAJIM, John

(30) Priority Data:

63/133,013 31/12/2020 US

63/179,100 23/04/2021 US

63/245,262 17/09/2021 US

(74) Agent(s): MARKS & CLERK SINGAPORE LLP

(51) International Patent Classification:

(54) Title of Invention: MUSCLE TARGETING COMPLEXES AND USES THEREOF FOR TREATING MYOTONIC DYSTROPHY

(57) Abstract:

The present application relates to oligonucleotides (e.g., antisense oligonucleotides such as gapmers) designed to target DMPK RNAs and targeting complexes for delivering the oligonucleotides to cells (e.g., muscle cells) and uses thereof, particularly uses relating to treatment of disease. In some embodiments, the muscle-targeting agent specifically binds to an internalizing cell surface receptor on muscle cells. In some embodiments, the molecular payload inhibits expression or activity of DMPK.

FIG. 25H

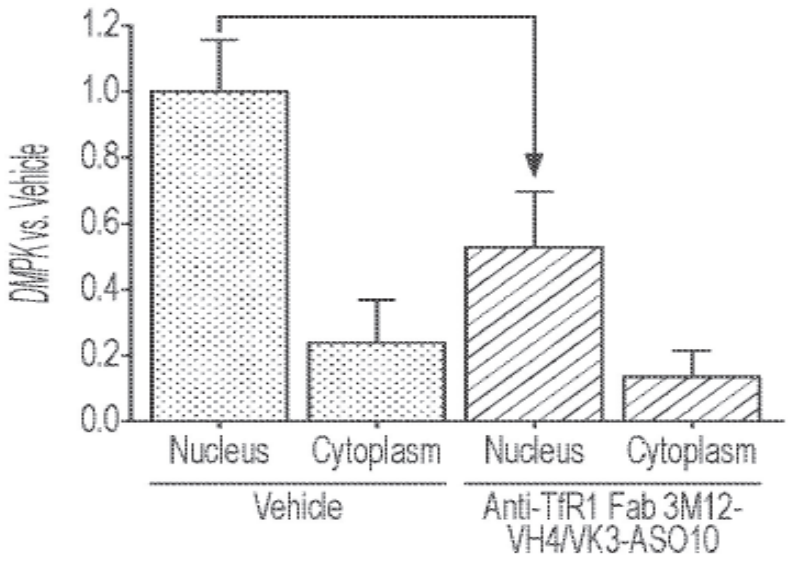

FIG. 25H

APPLICATIONS PUBLISHED UNDER SECTION 27 - cont'd

(12) SG PATENT APPLICATION

(13) A

(43) Publication Date: 31/01/2024

(21) Application No: 10202303548V

(71) Applicant(s): 2D GENOMICS INC.

(72) Inventor(s): BIBILLO, Arkadiusz; PATEL, Pranav

(30) Priority Data:

62/421,028 11/11/2016 US

62/477,211 27/03/2017 US

(74) Agent(s): SPRUSON & FERGUSON (ASIA) PTE. LTD.

(51) International Patent Classification:

(54) Title of Invention: METHODS FOR PROCESSING NUCLEIC ACID SAMPLES

(57) Abstract:

The present disclosure provides methods and systems for amplifying and analyzing nucleic acid samples. The present disclosure provides methods for preparing cDNA and/or DNA molecules and cDNA and/or DNA libraries using modified reverse transcriptases.

Figure 1

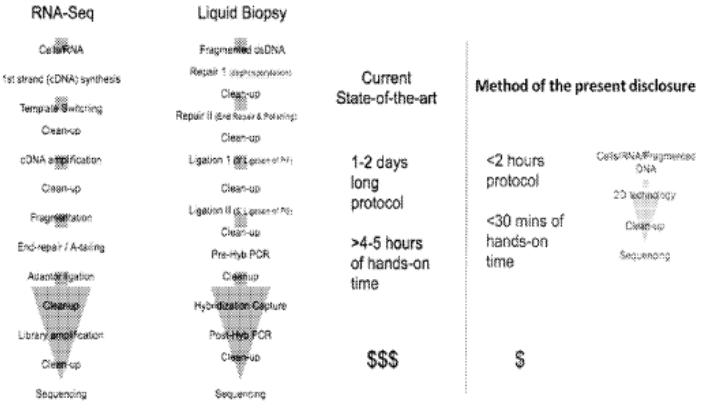

FIGURE 1
Workflow comparison

APPLICATIONS PUBLISHED UNDER SECTION 27 - cont'd

(12) SG PATENT APPLICATION

(13) A

(43) Publication Date: 31/01/2024

(21) Application No: 10202303549S

(71) Applicant(s): BECTON, DICKINSON AND COMPANY

(22) Date of filing: 06/09/2018

(72) Inventor(s): BIHLMAIER, Bryan; BURKHOLZ, Jonathan Karl; WANG, Bin

(30) Priority Data:
15/716,812
27/09/2017
UNITED STATES OF AMERICA

(74) Agent(s): DREW & NAPIER LLC

(51) International Patent Classification:

(54) Title of Invention: PERIPHERAL INTRAVENOUS CATHETERS HAVING FLOW DIVERTING FEATURES

(57) Abstract:

PIVCs with extension sets can include one or more flow diverting features for maximizing the amount of flushing that occurs within the interior of the catheter adapter. These flow diverting features can therefore minimize the amount of residual blood, medicament, or other fluid that may exist within the catheter adapter after the PIVC has been flushed via the extension set. The flow diverting features may be in the form of structural modifications to the side port of the extension set, separate components that are contained within the side port or catheter adapter, integrated components within the side port or catheter adapter, other features or some combination of any of these features.

Figure 3A and 3B

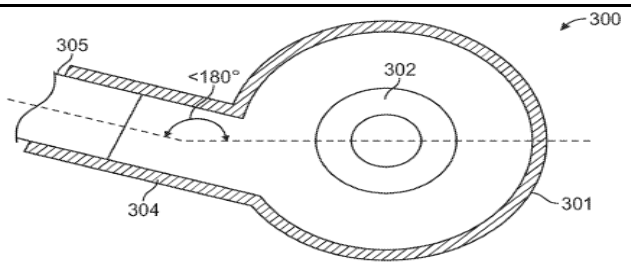

FIG. 3A

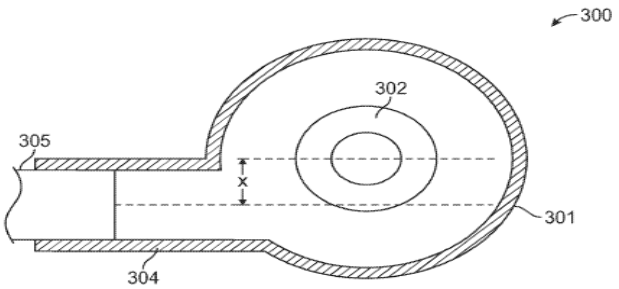

FIG. 3B

APPLICATIONS PUBLISHED UNDER SECTION 27 - cont'd

(12) SG PATENT APPLICATION

(13) A

(43) Publication Date: 31/01/2024

(21) Application No: 10202303558X

(71) Applicant(s): TENEOBIO, INC.

(22) Date of filing: 21/12/2018

(72) Inventor(s): ALDRED, Shelley Force; VAN SCHOOTEN, Wim; OGANA, Heather Anne N.; DAVISON, Laura Marie; HARRIS, Katherine; RANGASWAMY, Udaya; TRINKLEIN, Nathan D.

(30) Priority Data:

62/609,759 22/12/2017 US

(74) Agent(s): SPRUSON & FERGUSON (ASIA) PTE. LTD.

(51) International Patent Classification:

(54) Title of Invention: HEAVY CHAIN ANTIBODIES BINDING TO CD22

(57) Abstract:

Anti-CD22 heavy chain antibodies (e.g., UniAbs™) are disclosed, along with methods of making such antibodies, compositions, including pharmaceutical compositions, comprising such antibodies, and their use to treat B cell disorders that are characterized by the expression of CD22.

[FIGURE 5D]

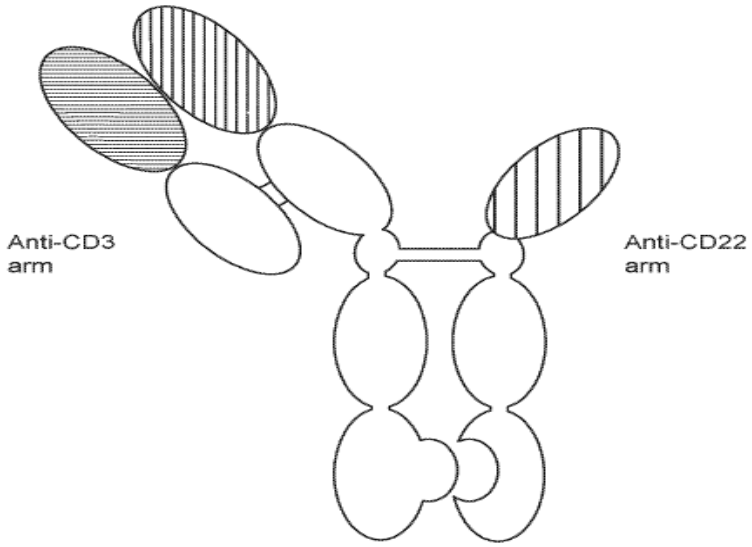

FIG. 5D

APPLICATIONS PUBLISHED UNDER SECTION 27 - cont'd

(12) SG PATENT APPLICATION

(13) A

(43) Publication Date: 31/01/2024

(21) Application No: 10202303562R

(71) Applicant(s): BEAM THERAPEUTICS INC.

(22) Date of filing: 20/12/2021

(72) Inventor(s): PATWARDHAN, Neeraj Narendra; HAMILTON, Gregory Lawrence; SAGO, Cory Dane; SHEHATA, Mina Fawzy; CHHABRA, Milloni Balwantkumar; CAMPBELL, Elizabeth Anne

(30) Priority Data:

63/128,680	21/12/2020	US
63/223,971	20/07/2021	US
63/287,390	08/12/2021	US

(74) Agent(s): FPA PATENT ATTORNEYS ASIA PTE. LTD.

(51) International Patent Classification:

(54) Title of Invention: NANOMATERIALS COMPRISING ESTER-LINKED ACETALS

(57) Abstract:

The present disclosure describes compositions, preparations, nanoparticles (such as lipid nanoparticles), and/or nanomaterials and methods of their use.

No accompanying figure

APPLICATIONS PUBLISHED UNDER SECTION 27 - cont'd

(12) SG PATENT APPLICATION

(13) A

(43) Publication Date: 31/01/2024

(21) Application No: 10202303569X

(71) Applicant(s): QUALCOMM INCORPORATED

(22) Date of filing: 19/12/2018

(72) Inventor(s): KADIRI, Prasad; PHUYAL, Umesh

(30) Priority Data:

62/607,889 19/12/2017 US

62/619,692 19/01/2018 US

16/224,311 18/12/2018 US

(74) Agent(s): DREW & NAPIER LLC

(51) International Patent Classification:

(54) Title of Invention: CARRIER AGGREGATION SCELL NEW STATE TRANSITION DESIGN

(57) Abstract:

Aspects of the disclosure relate to a method of operating a user equipment (UE) for wireless communication with a network. In some aspects, the UE obtains a medium access control (MAC) control element (CE) from a network. The MAC CE may be configured to indicate any one of a plurality of state transition actions for a secondary cell. The UE transitions to a secondary cell dormant state when a state transition action indicated by the MAC CE includes a transition to the secondary cell dormant state. The UE operates in the secondary cell dormant state.

Fig. 6

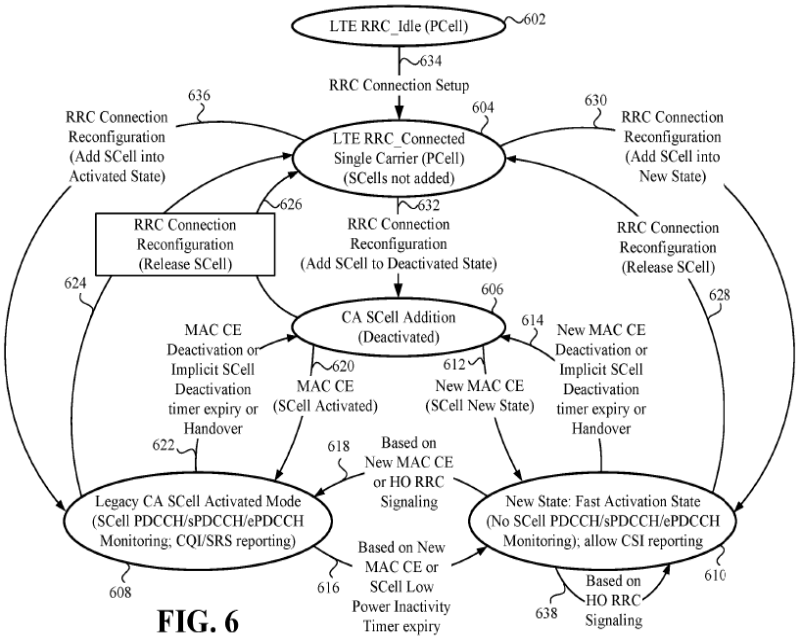

FIG. 6

APPLICATIONS PUBLISHED UNDER SECTION 27 - cont'd

(12) SG PATENT APPLICATION

(13) A

(43) Publication Date: 31/01/2024

(21) Application No: 10202303576W

(71) Applicant(s): IMMATICS BIOTECHNOLOGIES GMBH

(72) Inventor(s): ALTEN, Leonie; BUNK, Sebastian; MAURER, Dominik; WAGNER, Claudia

(22) Date of filing: 07/12/2017

(30) Priority Data:
10 2016 123 847.3
08/12/2016
GERMANY

62/431,588
08/12/2016
UNITED STATES OF AMERICA

(74) Agent(s): DREW & NAPIER LLC

(51) International Patent Classification:

(54) Title of Invention: NOVEL T CELL RECEPTORS AND IMMUNE THERAPY USING THE SAME

(57) Abstract:

The present invention pertains to antigen recognizing constructs against tumor associated antigens (MAGEA1). The invention in particular provides novel T cell receptor (TCR) based molecules which are selective and specific for the tumor expressed antigen of the invention. The TCR of the invention, and TAA binding fragments derived therefrom, are of use for the diagnosis, treatment and prevention of TAA expressing cancerous diseases. Further provided are nucleic acids encoding the antigen recognizing constructs of the invention, vectors comprising these nucleic acids, recombinant cells expressing the antigen recognizing constructs and pharmaceutical compositions comprising the compounds of the invention.

[Figure 1]

Figure 1:

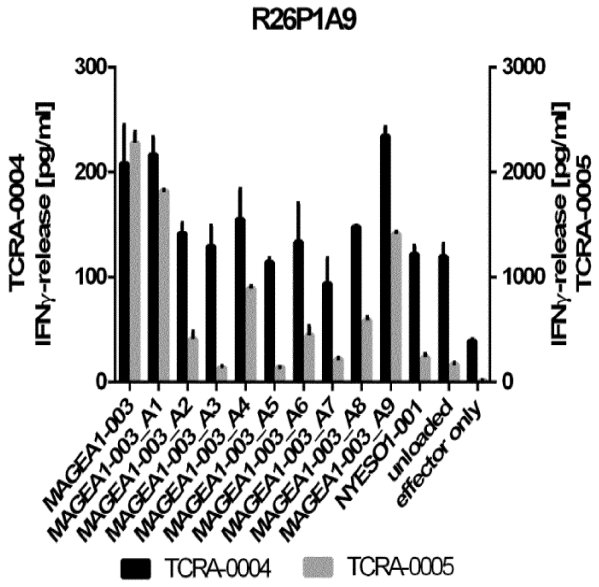

APPLICATIONS PUBLISHED UNDER SECTION 27 - cont'd

(12) SG PATENT APPLICATION

(13) A

(43) Publication Date: 31/01/2024

(21) Application No: 10202303579U

(71) Applicant(s): KPR U.S., LLC

(22) Date of filing: 28/06/2018

(72) Inventor(s): DENSON, Jesse; KEITH, Laura; WUDYKA, Scott; ABDOOL, Zaheer

(30) Priority Data:
62/527,155
30/06/2017
UNITED STATES OF AMERICA

(74) Agent(s): SPRUSON & FERGUSON (ASIA) PTE. LTD.

(51) International Patent Classification:

(54) Title of Invention: MONITORING VITAL PARAMETERS OF A COMPRESSION GARMENT WEARER

(57) Abstract:

Monitoring vital parameters of a wearer of a compression garment by analyzing a pressure signal waveform indicative of a fluid pressure in an inflatable and deflatable bladder of the compression garment. Analyzing the pressure signal waveform for an oscillating amplitude as a function of time and/or a representation of a pulse of the wearer provides an indication of blood pressure of the wearer.

Fig. 1

FIG. 1

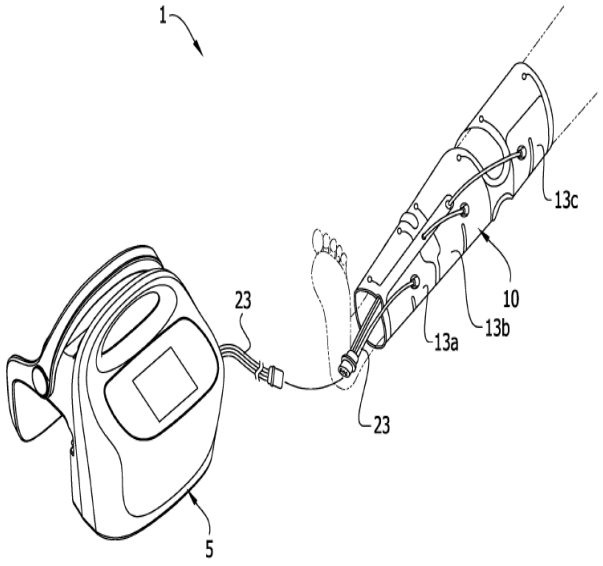

APPLICATIONS PUBLISHED UNDER SECTION 27 - cont'd

(12) SG PATENT APPLICATION

(13) A

(43) Publication Date: 31/01/2024

(21) Application No: 10202303582V

(71) Applicant(s): AIM IMMUNOTECH INC.

(22) Date of filing: 20/12/2019

(72) Inventor(s): STRAYER, David, R.; EQUELS, Thomas, K.

(30) Priority Data:

62/783,834	21/12/2018	US
62/792,760	15/01/2019	US
62/792,765	15/01/2019	US
62/869,909	02/07/2019	US
62/885,143	09/08/2019	US

(74) Agent(s): Amica Law LLC

(51) International Patent Classification:

(54) Title of Invention: COMPOSITIONS AND METHODS FOR CANCER THERAPY

(57) Abstract:

One aspect of this disclosure is directed to a method for treating a cancer in a subject in need thereof by administering to the subject at least a first compound and a second compound in any order together or separately. The first compound is an effective amount of a checkpoint inhibitor optionally with at least one pharmaceutically acceptable carrier. The second compound is an effective amount of an Therapeutic Double Stranded RNA (tdsRNA) optionally with at least one pharmaceutically acceptable carrier. The compounds can be administered together or separately. Compositions for the practice of the method are also described.

(No suitable figure to accompany the Abstract)

APPLICATIONS PUBLISHED UNDER SECTION 27 - cont'd

(12) SG PATENT APPLICATION

(13) A

(43) Publication Date: 31/01/2024

(21) Application No: 10202303598R

(71) Applicant(s): ZHANG, Dacheng

(72) Inventor(s): CHEN, Jie;ZHANG, Chao;HOU, Dianjie;WANG, Xin;GUO, Zichuan;LIANG, Yao

(30) Priority Data:

202011104069.0	18/10/2020	CN
202011457356.X	13/12/2020	CN
202110132451.0	31/01/2021	CN

(74) Agent(s): SIN CATHAY IP LLP

(51) International Patent Classification:

(54) Title of Invention: METHOD FOR CREATING NON-FUNGIBLE TOKEN BY APPARATUS FOR CONTRACT TRANSACTIONS

(57) Abstract:

A method for creating a non-fungible token executed by an apparatus for contract transactions consisting of at least one processor is disclosed. The method comprises: interacting by an asset amplification contract manager with an amplification contract which involves a first asset A and a second asset B; setting the asset amplification contract by the asset amplification contract manager so that the amount of the second asset B, converted into by the contract position holdings of a transaction user, is positively correlated with a contract exchange rate Ph of the first asset A to the second asset B by the asset amplification contract manager; creating the non-fungible token for the transaction user by a token manager, wherein attributes of the non-fungible token at least comprise the amount of the contract position holdings and a contract position holding price of the asset amplification contract for the transaction user.

[FIG 1]

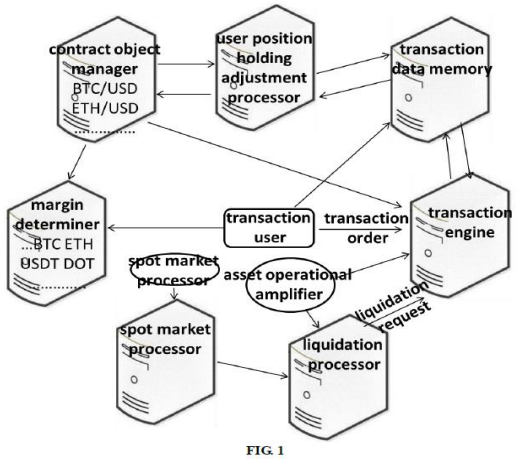

FIG. 1

APPLICATIONS PUBLISHED UNDER SECTION 27 - cont'd

(12) SG PATENT APPLICATION

(13) A

(43) Publication Date: 31/01/2024

(21) Application No: 10202303602S

(71) Applicant(s): WING AVIATION LLC

(22) Date of filing: 15/02/2019

(72) Inventor(s): PRAGER, Andre

(30) Priority Data:
15/899,214
19/02/2018
UNITED STATES OF AMERICA

(74) Agent(s): SPRUSON & FERGUSON (ASIA) PTE. LTD.

(51) International Patent Classification:

(54) Title of Invention: PACKAGE LOADING MECHANISM

(57) Abstract:

A payload retrieval apparatus including an extending member having an upper end and a lower end, a channel having a first end and a second end, the channel coupled to the extending member, a first tether engager that extends in a first direction from the first end of the channel section, and a payload holder positioned near the second end of the channel and is adapted to secure a payload.

[Fig. 14]

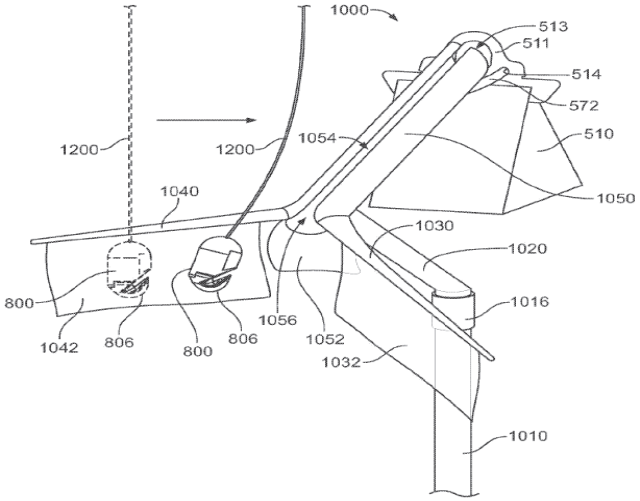

FIG. 14

APPLICATIONS PUBLISHED UNDER SECTION 27 - cont'd

(12) SG PATENT APPLICATION

(13) A

(43) Publication Date: 31/01/2024

(21) Application No: 10202303608P

(71) Applicant(s): BOARD OF REGENTS, THE UNIVERSITY OF TEXAS SYSTEM

(22) Date of filing: 21/05/2020

(72) Inventor(s): PHILLIPS, William T.; BITAR, Ryan

(30) Priority Data:
62/851,915
23/05/2019
UNITED STATES OF AMERICA

(74) Agent(s): SPRUSON & FERGUSON (ASIA) PTE. LTD.

(51) International Patent Classification:

(54) Title of Invention: RADIOTHERAPEUTIC MICROSPHERES

(57) Abstract:

Certain embodiments are directed to compositions comprising and method for producing alginate microspheres that contain liposomes encapsulating a variety of useful substances. Substances of note that can be encapsulated in liposomes and loaded into alginate microspheres include radiotherapeutics (e.g., rhenium-188), radiolabels (e.g., technetium-99m), chemotherapeutics (doxorubicin), magnetic particles (e.g., 10 m iron nanoparticles), and radio-opaque material (e.g., iodine contrast).

FIG. 1

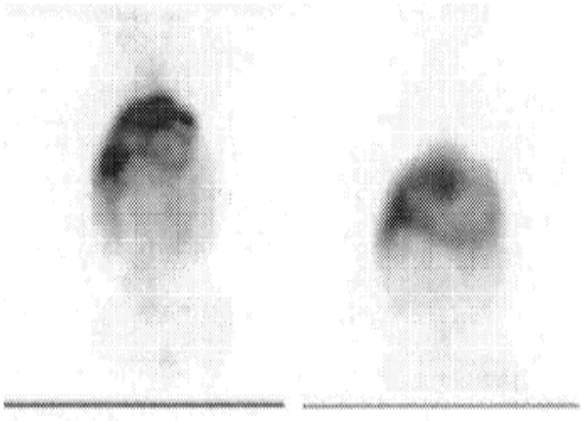

FIG. 1

APPLICATIONS PUBLISHED UNDER SECTION 27 - cont'd

(12) SG PATENT APPLICATION

(13) A

(43) Publication Date: 31/01/2024

(21) Application No: 10202303612X

(71) Applicant(s): EBARA CORPORATION

(22) Date of filing: 20/08/2020

(72) Inventor(s): Cheng CHENG; Shingo TOGASHI; Makoto FUKUSHIMA; Kazuto HIROKAWA

(30) Priority Data:
2019-156987
29/08/2019
JAPAN

2019-156988
29/08/2019
JAPAN

(74) Agent(s): LEE & LEE

(51) International Patent Classification:

(54) Title of Invention: ELASTIC MEMBRANE AND SUBSTRATE HOLDING APPARATUS

(57) Abstract:

An elastic membrane capable of being easily secured to a head body of a substrate holding apparatus while inhibiting variation of a degree of deformation of the elastic membrane in a circumferential direction is disclosed. The elastic membrane according to the present invention is used in the substrate holding apparatus. The elastic membrane includes: a contact portion to be brought into contact with a substrate for pressing the substrate against a polishing pad; and an edge circumferential wall extending from a peripheral edge of the contact portion. The edge circumferential wall includes an edge-circumferential-wall lip portion sandwiched between a head body of the substrate holding apparatus and an edge mounting member for securing the edge circumferential wall to the head body. The edge-circumferential-wall lip portion has at least a part of a surface thereof roughened.

FIG. 5

FIG. 5

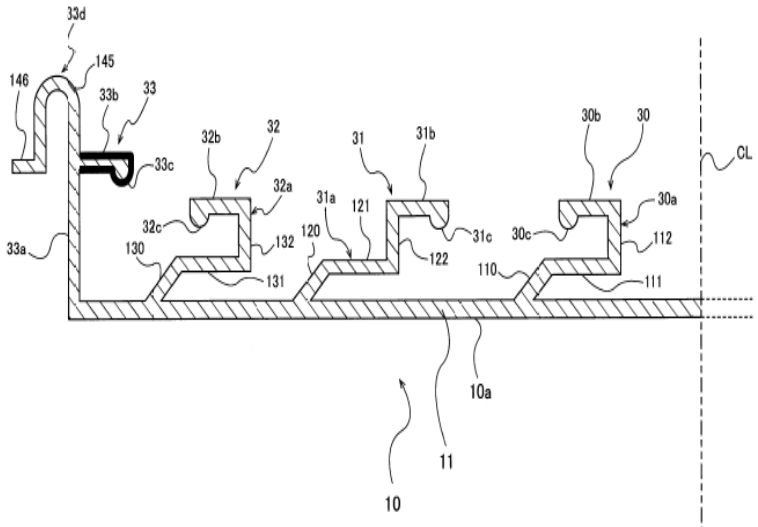

APPLICATIONS PUBLISHED UNDER SECTION 27 - cont'd

(12) SG PATENT APPLICATION

(13) A

(43) Publication Date: 31/01/2024

(21) Application No: 10202303621Q

(71) Applicant(s): UNIVERSAL CITY STUDIOS LLC

(72) Inventor(s): MCGEHEE, William, V.

(30) Priority Data:
15/711,614
21/09/2017
UNITED STATES OF AMERICA

(74) Agent(s): SPRUSON & FERGUSON (ASIA) PTE. LTD.

(51) International Patent Classification:

(54) Title of Invention: LOCKER MANAGEMENT TECHNIQUES

(57) Abstract:

[0044] A locker system includes a locker area, a plurality of lockers positioned in the locker area, and a plurality of augmented reality headsets. Individual augmented headsets of the plurality of augmented reality headsets including a display and being configured to be worn by respective individual users. The locker system also includes a controller communicatively coupled to the plurality of lockers and the plurality of augmented reality headsets, wherein the controller comprises a memory and a processor configured to execute instructions stored on the memory. The instructions include generating locker assignments to assign individual lockers of the plurality of lockers to the respective individual users, communicating the locker assignments of the assigned individual lockers to the respective individual users using the plurality of augmented reality headsets, and controlling operation of the assigned individual lockers of the plurality of lockers based on signals received from the plurality of augmented reality headsets.

Figure 1

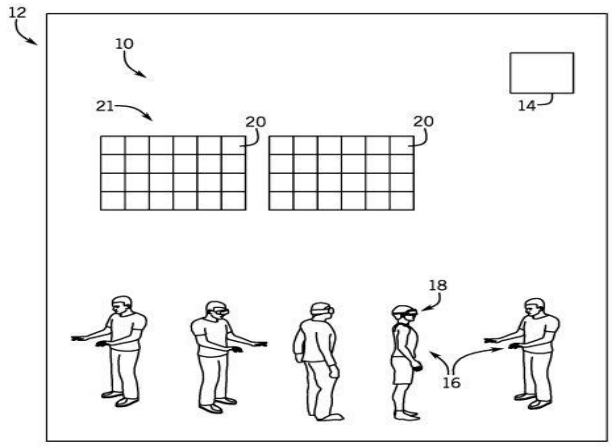

FIG. 1

APPLICATIONS PUBLISHED UNDER SECTION 27 - cont'd

(12) SG PATENT APPLICATION

(13) A

(43) Publication Date: 31/01/2024

(21) Application No: 10202303624P

(71) Applicant(s): LYELL IMMUNOPHARMA, INC.

(22) Date of filing: 23/11/2021

(72) Inventor(s): VIZCARDO SAKODA, Raul E.;RESTIFO, Nicholas;KLAUSNER, Richard D.;HUANG, Yin;MAEDA, Takuya;TAMAOKI, Naritaka;YAMAZAKI, Yasuhiro

(30) Priority Data:

63/117,787	24/11/2020	US
63/153,881	25/02/2021	US
63/165,093	23/03/2021	US

(74) Agent(s): RODYK IP

(51) International Patent Classification:

(54) Title of Invention: METHODS FOR MAKING, COMPOSITIONS COMPRISING, AND METHODS OF USING REJUVENATED T CELLS

(57) Abstract:

The present disclosure relates generally to methods of producing rejuvenated T cells, comprising, contacting T cells with at least one reprogramming factor and reactivating the contacted cells; and compositions and methods of using same. The present disclosure also describes cell populations prepared according to methods described herein. The disclosure also provides for methods of treating patients using cell populations prepared by the methods described herein.

FIG. 1

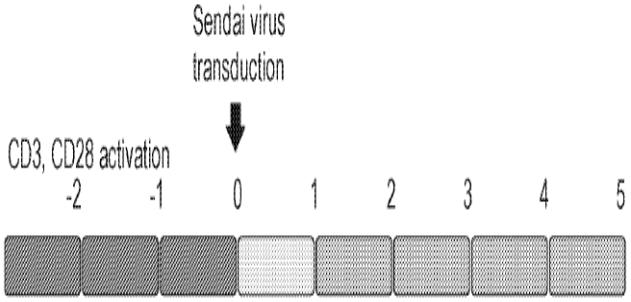

FIG. 1

APPLICATIONS PUBLISHED UNDER SECTION 27 - cont'd

(12) SG PATENT APPLICATION

(13) A

(43) Publication Date: 31/01/2024

(21) Application No: 10202303626U

(71) Applicant(s): PFETCH, INC.

(22) Date of filing: 25/09/2020

(72) Inventor(s): CVIJANOVIC, Christi

(30) Priority Data:
63/101,218
03/10/2019
UNITED STATES OF AMERICA

(74) Agent(s): Amica Law LLC

(51) International Patent Classification:

(54) Title of Invention: RGB NETWORK AND DEVICES

(57) Abstract:

A network can comprise client devices, provider devices, and a database array. The network can be configured for RGB formatted data. A client device processes and converts client inputs into rows of client data columns in a synthesizing database stored in a memory device. The client data rows comprise transcoded RGB formatting of the client inputs. A provider device processes provider inputs. Either the database array or the provider device can process the provider inputs into rows of provider data columns of transcoded RGB formatting of the provider inputs. A collimation of the client and provider RGB formatted data can result in an indicia of complementary client and provider inputs.

FIG. 5

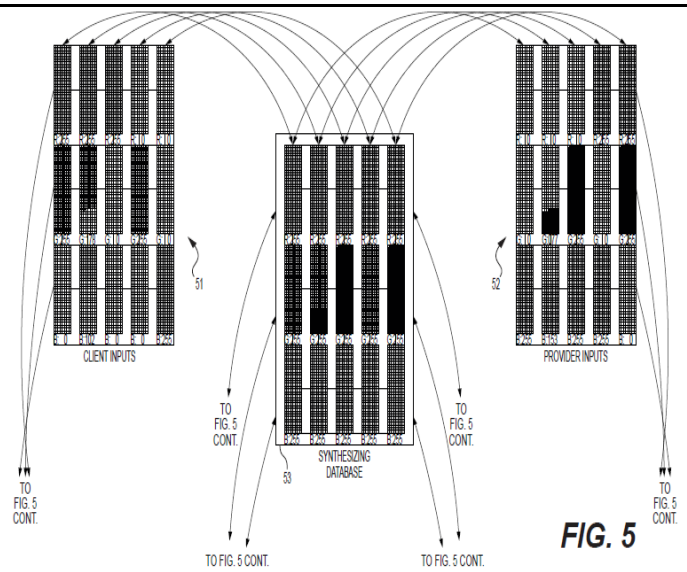

FIG. 5

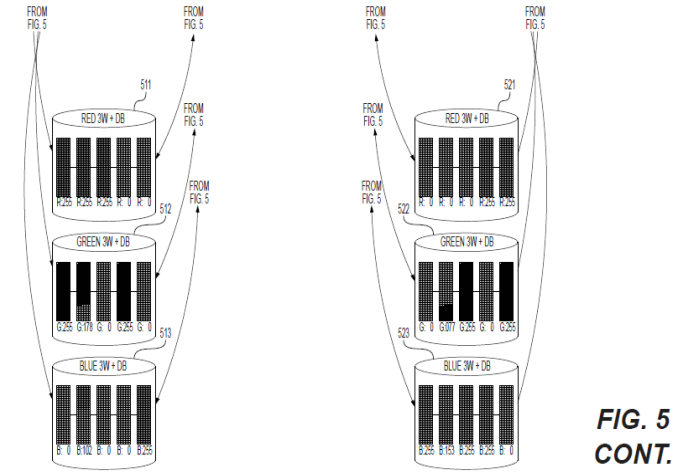

FIG. 5 CONT.

APPLICATIONS PUBLISHED UNDER SECTION 27 - cont'd

(12) SG PATENT APPLICATION

(13) A

(43) Publication Date: 31/01/2024

(21) Application No: 10202303628W

(71) Applicant(s): PFETCH, INC.

(22) Date of filing: 25/09/2020

(72) Inventor(s): CVIJANOVIC, Christi

(30) Priority Data:
63/101,218
03/10/2019
UNITED STATES OF AMERICA

(74) Agent(s): Amica Law LLC

(51) International Patent Classification:

(54) Title of Invention: RGB NETWORK AND DEVICES

(57) Abstract:

A network can comprise client devices, provider devices, and a database array. The network can be configured for RGB formatted data. A client device processes and converts client inputs into rows of client data columns in a synthesizing database stored in a memory device. The client data rows comprise transcoded RGB formatting of the client inputs. A provider device processes provider inputs. Either the database array or the provider device can process the provider inputs into rows of provider data columns of transcoded RGB formatting of the provider inputs. A collimation of the client and provider RGB formatted data can result in an indicia of complementary client and provider inputs.

FIG. 5

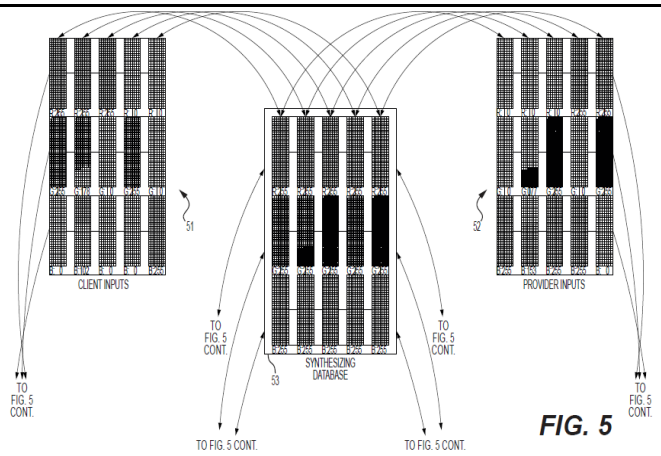

FIG. 5

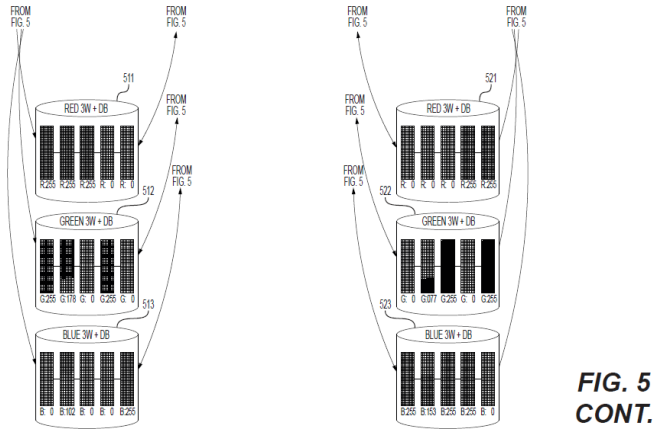

FIG. 5 CONT.

APPLICATIONS PUBLISHED UNDER SECTION 27 - cont'd

(12) SG PATENT APPLICATION

(13) A

(43) Publication Date: 31/01/2024

(21) Application No: 10202303638X

(71) Applicant(s): TESARO, INC.

(22) Date of filing: 27/12/2018

(72) Inventor(s): FENG, Bin; RAMASWAMY, Sridhar; WANG, Jing, Yu; XIAO, Yonghong; ZHOU, Yinghui

(30) Priority Data:
62/610,761
27/12/2017
UNITED STATES OF AMERICA

62/613,372
03/01/2018
UNITED STATES OF AMERICA

62/680,511
04/06/2018
UNITED STATES OF AMERICA

(74) Agent(s): DREW & NAPIER LLC

(51) International Patent Classification:

(54) Title of Invention: METHODS OF TREATING CANCER

(57) Abstract:

The present invention provides methods of treatment of cancer patients having deficiency in at least one non-BRCA1/2 gene involved in the homologous recombination repair (HRR) pathway with a poly(ADP-ribose) polymerase (PARP) inhibitor such as niraparib. In particular, cancer patients having a deficiency in at least one gene selected from the group consisting of BRCA1, BRCA2, ATM, ATR, BAP1, BARD1, BLM, BRIP1, MRE11A, NBN, PALB2, RAD51, RAD51B, RAD51C, RAD51D, RAD52, AD54L, XRCC2, TP53, or RBI can benefit from treatment with niraparib.

FIG. 1A

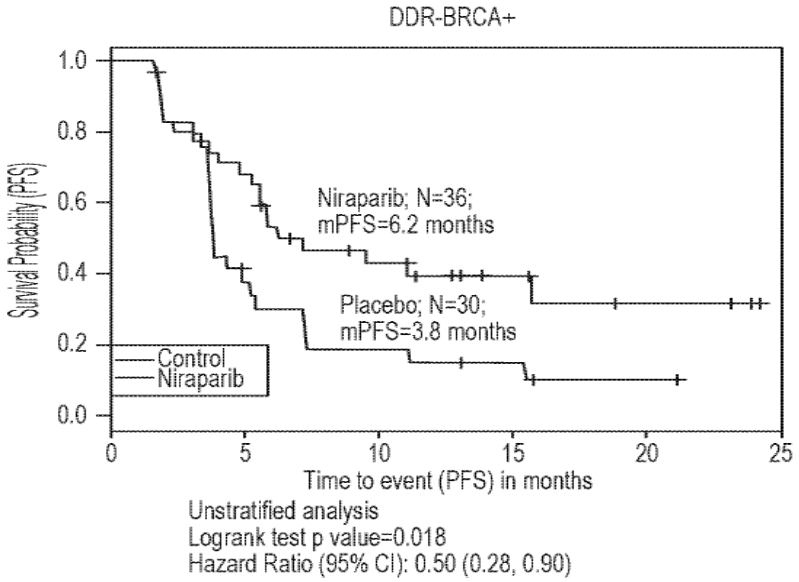

FIG. 1A

APPLICATIONS PUBLISHED UNDER SECTION 27 - cont'd

(12) SG PATENT APPLICATION

(13) A

(43) Publication Date: 31/01/2024

(21) Application No: 10202303639Q

(71) Applicant(s): ALPINE IMMUNE SCIENCES, INC.

(22) Date of filing: 03/01/2019

(72) Inventor(s): SWANSON, Ryan

(30) Priority Data:
62/613,378
03/01/2018
UNITED STATES OF AMERICA

62/733,622
19/09/2018
UNITED STATES OF AMERICA

(74) Agent(s): SPRUSON & FERGUSON (ASIA) PTE. LTD.

(51) International Patent Classification:

(54) Title of Invention: MULTI-DOMAIN IMMUNOMODULATORY PROTEINS AND METHODS OF USE THEREOF

(57) Abstract:

Provided herein are multi-domain immunomodulatory proteins, nucleic acids encoding such immunomodulatory proteins, cells engineered to express the immunomodulatory proteins and infectious agents containing nucleic acid encoding the immunomodulatory proteins. The immunomodulatory proteins bind both an inhibitory receptor and a receptor involved in activation signaling cascades in an immune cell, such as a T cell. The immunomodulatory proteins, engineered cells and infectious agents provide therapeutic utility for a variety of immunological diseases or conditions. Compositions and methods for making and using such proteins are provided.

Fig. 2

FIG. 2

